Klier Property

File No:_____

Preliminary Drainage Report

Prepared for

Tersa Tellus, Inc.
PO Box 1587
Monroe, WA 98272

Prepared by

LDC, Inc.
14201 NE 200th Street, #100
Woodinville, WA 98072
(425) 806-1869

May 2016 ***Job No: 15-183***

TABLE OF CONTENTS

Section	Title	
1	Project Overview	1-1
2	Risk Assessment Analysis and Temporary Erosion and Sediment Control Analysis and Design	2-1
3	Downstream Analysis	3-1
4	Detention and Water Quality Facility Analysis and Design	4-1
5	Conveyance Analysis and Design	5-1
6	Operations and Maintenance Manual	6-1
7	Special Reports and Studies	7-1

SECTION I: PROJECT OVERVIEW

The proposed Klier Property project is comprised of parcel numbers 28073100100400, 28073100200300, 28073100200900 and 28073100200901. The project proposes a Planned Residential Development (PRD) to develop 88 lots with single family homes along with associated driveways, utilities, a recreational park, and ROW access routes on a 26.38 AC site (prior to ROW dedication). The project area address is 13407 Chain Lake Rd, Monroe, WA 98272-7703. The site is located within the NE ¼ and NW ¼ of Section 31, Township 28N, Range 7E. See Vicinity Map in the following pages for geographical location.

EXISTING SITE

The existing site is comprised of four parcels containing one single family home, a double wide mobile home, and associated driveways and outbuildings. There are minimal areas of pervious landscape associated with the dwelling units. The remainder of the parcel is undeveloped with a forested ground cover and contains two separate wetland areas approximately 7 acres in size. According to Geotechnical Evaluation, provided by Nelson Geotechnical Associates, Inc. on April 29th 2016, the site is underlain by native glacial till soils. Glacial till soils are generally not conducive for onsite stormwater management techniques involving infiltration.

UPSTREAM AREA

An upstream tributary basin is located north of the subject property. Upstream basin runoff flows overland in the south-southeasterly direction and enters the subject property along the northern property boundary of existing parcels 28073100200900 and 28073100200901. The upstream basin consists of mostly heavily vegetated forest and all stormwater runoff is considered to be fully dispersed before overland flows enter the subject property. See Figure 5.0 Developed Hydrology Map for a visual depiction of the upstream basin delineation.

DOWNSTREAM ANALYSIS

Downstream flow paths have been identified as necessary to perform Threshold Discharge Area (TDA) assessment. The subject property contains one TDA only. There are three primary downstream flow paths exiting the property, two of which contain two separate isolated natural discharge locations from the site. All three of the primary flow paths converge downstream within ¼ of mile from their natural discharge locations. Please see section 3.0 for additional details.

PROPOSED DEVELOPMENT

The Klier Property project is a Planned Residential Development (PRD) proposing 88 single family homes including associated driveways, utilities, a recreational park area and a network of ROW access roads. Development will disturb approximately 18.82 acres. All existing structures will be demolished as part of the development.

Frontage improvements along Chain Lake Road include installation of a bike travel lane, a right turn pocket, new sidewalk, curb and gutter and a new drainage network of catch basins and storm drainage pipe. The proposed project will dedicate approximately 0.23 acres of ROW frontage along Chain Lake Road to the City of Monroe.

The proposed development is vested under the April 2000 City of Monroe Public Works Design and Construction Standards and the 2005 Department of Ecology Stormwater Management Manual (DOE Technical Manual) as adopted by the City of Monroe.

MINIMUM REQUIREMENTS

Per the DOE Technical Manual, Minimum Requirements 1-9 apply to the proposed development.

Minimum Requirement #1: Preparation of Stormwater Site Plans: This Report along with the Construction Plans satisfies this minimum requirement.

Minimum Requirement #2: Construction Stormwater Pollution Prevention: See Section 2 of this Report for the SWPPP BMP Elements, and the SWPPP (submitted as a separate document in forthcoming submittal) for a complete discussion of erosion control BMP's and their use specific to the site.

Minimum Requirement #3: Source Control of Pollution: Permanent source control BMPs are not applicable for the subject site since the associated activities for the new residences do not fall within the types of facilities listed within Volume IV of the Drainage Manual (residential developments are not required to implement source control BMP's).

Minimum Requirement #4: Preservation of Natural Drainage Systems and Outfalls: Natural discharge locations will be preserved to the greatest extent possible. The developed downstream drainage flow paths will generally remain unaltered from the pre-developed flow paths. Please see Downstream Analysis in section 3 of this report for further information regarding the location of existing natural outfalls.

Minimum Requirement #5: Onsite Stormwater Management:

Glacial till site soils are generally not conducive for onsite stormwater management techniques involving infiltration. In addition to BMP T5.13 soils management, BMP T5.11 perforated roof drain stub-out connections will be implemented between homes and street underground conveyance systems. See Stormwater Site Plans for locations and specifications.

Minimum Requirement #6: Runoff Treatment:

The residential nature of the development and the lack of fish bearing surface water downstream of the project require a "Basic" water quality treatment level. The northern and southern basins will achieve basic water quality treatment by means of wetpool facilities located beneath the proposed detention ponds. The frontage basin will be treated by a StormFilter ZPG media filtration structure located upstream detention tank facility. See section 4.0 for additional description and calculations concerning the proposed stormwater water quality measures. See Onsite Stormwater Analysis in Section 4.0 of this report for additional information concerning stormwater water quality treatment.

Minimum Requirement #7: Flow Control: All runoff from developed/disturbed surfaces will be collected, treated, detained and released to natural drainage courses at mitigated rates. The site is broken into three separate flow control and water quality basins. Detention wetponds provide flow control for the northern and southern basins per the DOE Technical Manual, section 3.2.1. Detention pipe will provide flow control for the frontage basin per the DOE Technical Manual, section 3.2.2. See section 4.0 for additional description and calculations concerning the proposed stormwater flow control measures.

Minimum Requirement #8: Wetlands Protection: Onsite wetlands will be preserved. Wetland mitigation and buffer averaging is proposed to offset the minor disturbance impacts within the wetland buffer areas. Temporary construction disturbance in the wetland buffer area will be replanted with native vegetation such that the area will return to its native condition after development. Please reference Critical Area Report and Buffer Mitigation Plan for Tersa Tellus, provided by Wetland Resources, Inc. on May 4th, 2016, for additional information.

Minimum Requirement #9: Operation and Maintenance: See Operations and Maintenance in Section 5 of this report.

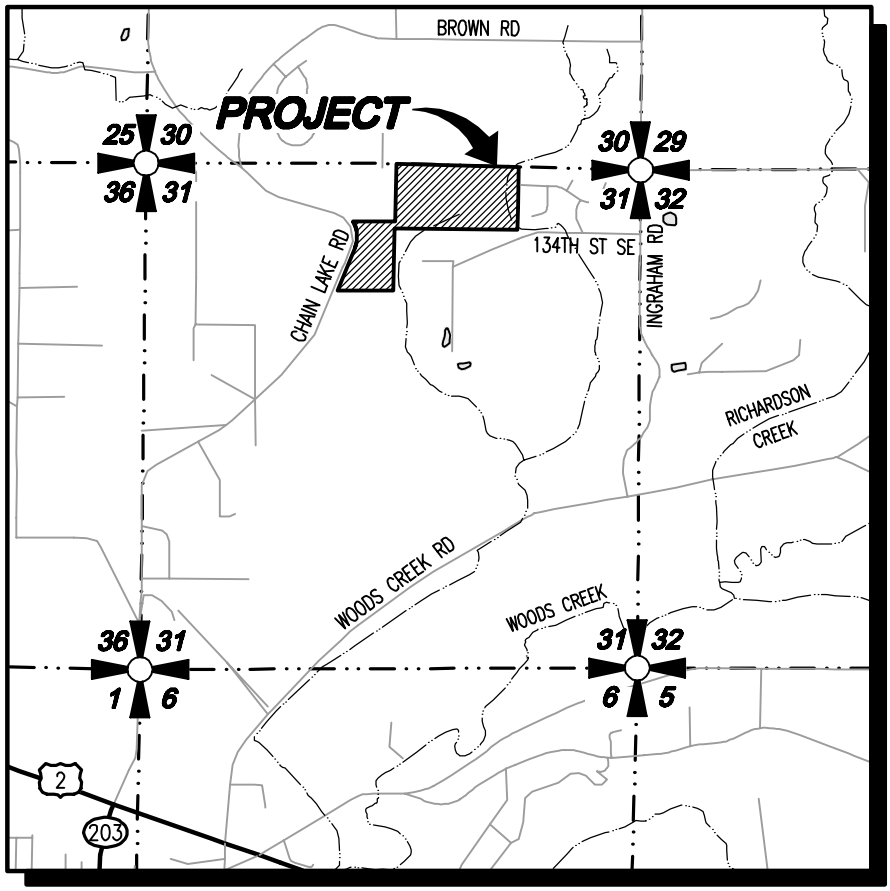

VICINITY MAP

SCALE: 1"=2000'

Drawing: P:\2015\15-183 Klier Property - Monroe, WA\Exhibits\15-183E-VM.dwg Plotted: Apr 27, 2016 - 4:25pm

LDC
THE CIVIL ENGINEERING GROUP

Engineering
Structural
Planning
Survey

14201 NE 200th St., #100
Woodinville, WA 98072

Ph. 425.806.1869
Fx. 425.482.2893

www.LDCcorp.com

TERSA TELLUS, INC

KLIER PROPERTY

VICINITY MAP

A PORTION OF THE NE 1/4 & NW 1/4, SEC 31, TWN 28 N, RGE 7 E, W.M., SNOHOMISH COUNTY, WASHINGTON

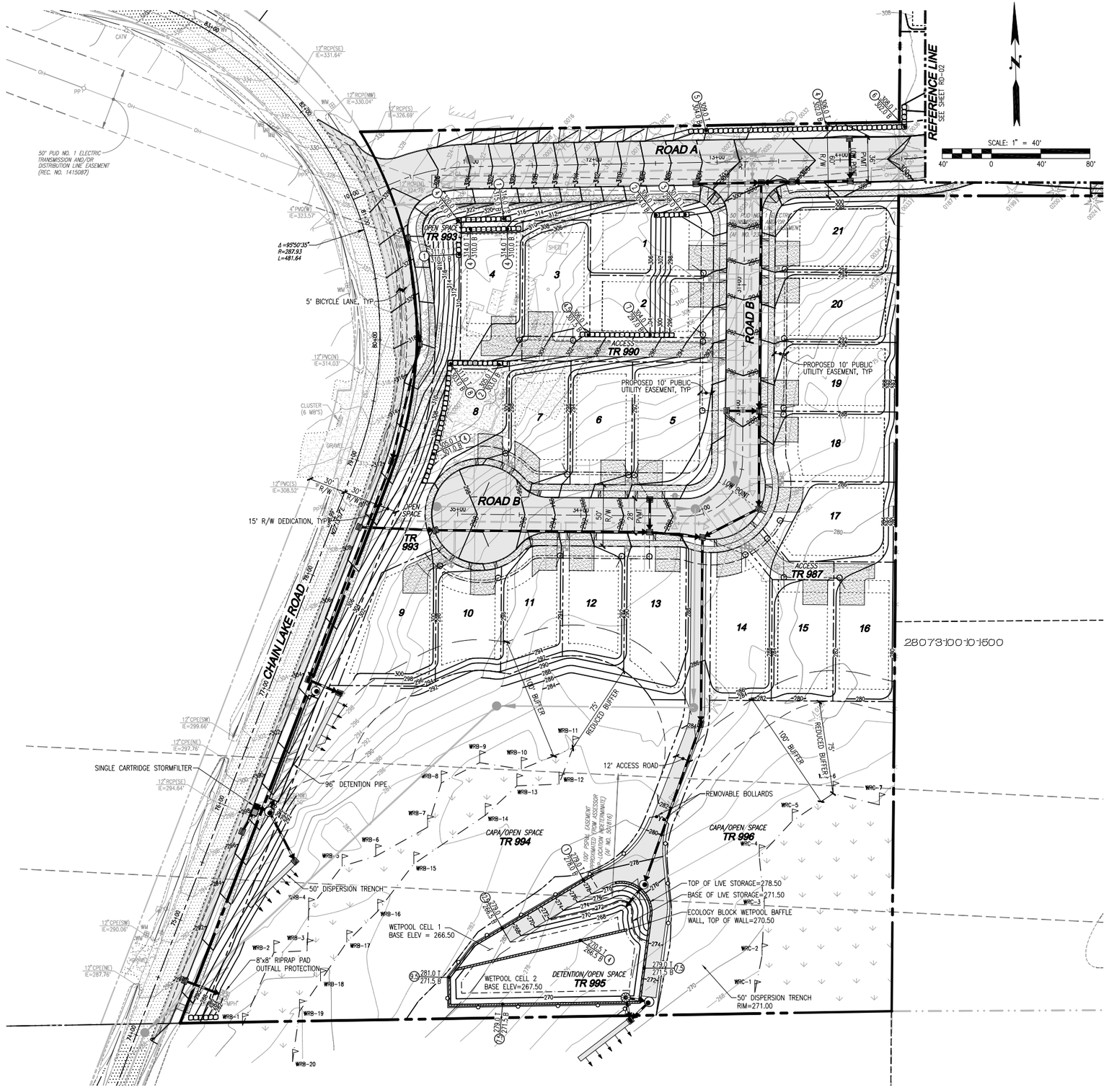

SURVEY DISCLAIMER

THE TOPOGRAPHIC SURVEY WAS PERFORMED BY LDC, INC. IN DECEMBER 2015. ANY CHANGES TO THE SITE AFTER THIS DATE WILL NOT BE REFLECTED IN THE PLANS. ANY DISCREPANCIES FOUND BETWEEN WHAT IS SHOWN ON THE PLANS AND WHAT IS NOTED IN THE FIELD SHOULD BE BROUGHT IMMEDIATELY TO THE ATTENTION OF THE ENGINEER.

Call 2 Business Days Before You Dig
811 or 1-800-424-5555
Utilities Underground Location Center

REVISIONS

NO.	DATE	DESCRIPTION	BY

LDC
THE CIVIL ENGINEERING GROUP
Engineering
Structural
Planning
Survey
14201 NE 200th St., #100
Woodinville, WA 98072
Ph. 425.806.1869
Fx. 425.482.2693
www.LDCcorp.com

TERSA TELLUS, INC

KLIER PARMENTER PRD

PRELIMINARY ROAD, GRADING AND STORM DRAINAGE PLAN

JEREMY L. STATHER
STATE OF WASHINGTON
45888
REGISTERED
PROFESSIONAL ENGINEER

JOB NUMBER:	15-183
DRAWING NAME:	15183P-RD-PL
DESIGNER:	JLS
DRAFTING BY:	RCR
DATE:	2-04-16
SCALE:	1"=40'
JURISDICTION:	CITY OF MONROE

RD-01

SHEET 8 OF 13

A PORTION OF THE NE 1/4 & NW 1/4, SEC 31, TWN 28 N, RGE 7 E, W.M., SNOHOMISH COUNTY, WASHINGTON

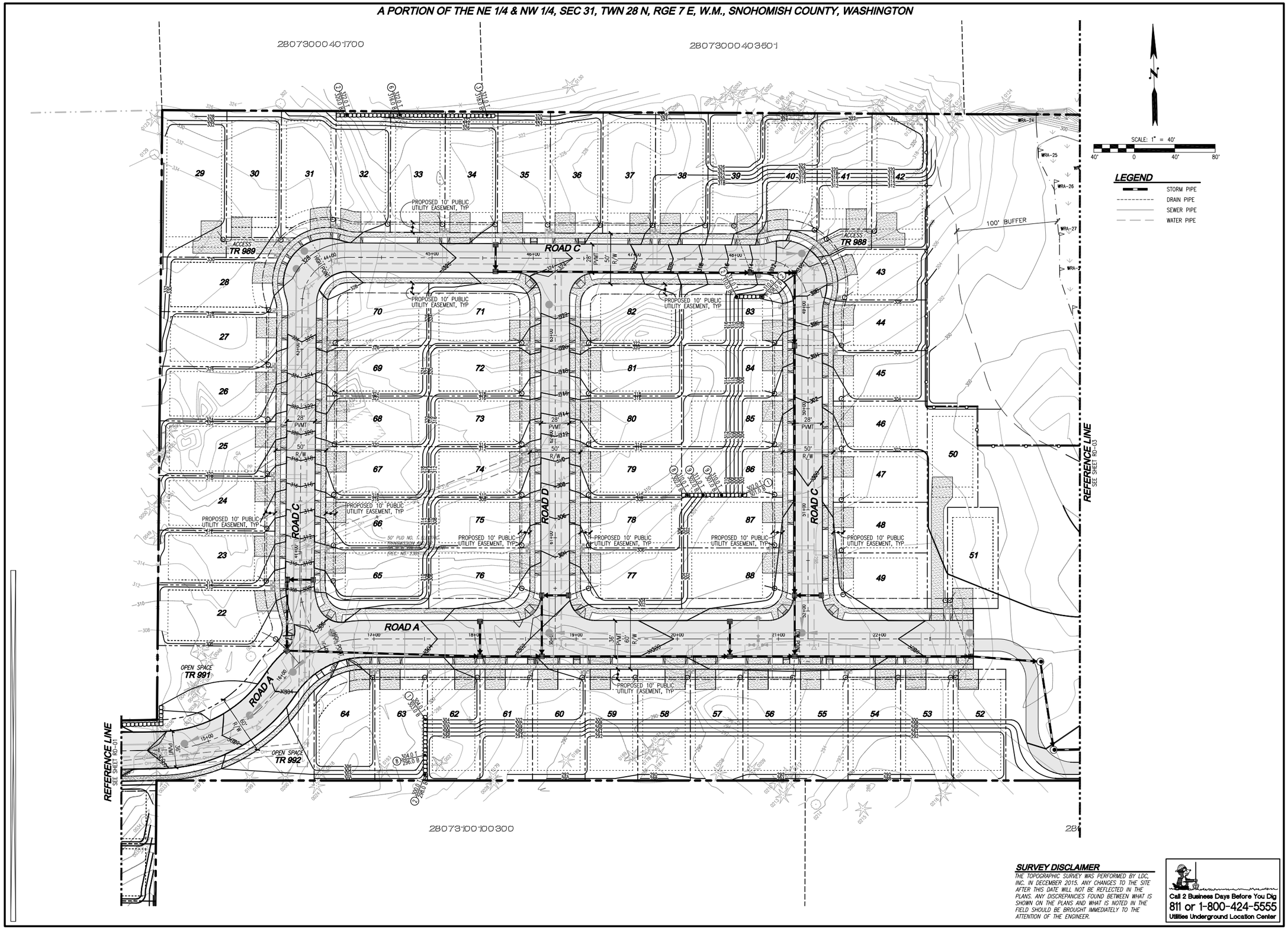

SURVEY DISCLAIMER

THE TOPOGRAPHIC SURVEY WAS PERFORMED BY LDC, INC. IN DECEMBER 2015. ANY CHANGES TO THE SITE AFTER THIS DATE WILL NOT BE REFLECTED IN THE PLANS. ANY DISCREPANCIES FOUND BETWEEN WHAT IS SHOWN ON THE PLANS AND WHAT IS NOTED IN THE FIELD SHOULD BE BROUGHT IMMEDIATELY TO THE ATTENTION OF THE ENGINEER.

Call 2 Business Days Before You Dig
811 or 1-800-424-5555
Utilities Underground Location Center

REVISIONS

NO.	DATE	DESCRIPTION	BY

LDC
THE CIVIL ENGINEERING GROUP
Engineering
Structural
Planning
Survey
14201 NE 200th St., #100
Woodinville, WA 98072
Ph. 425.806.1869
Fx. 425.482.2693
www.LDCcorp.com

TERSA TELLUS, INC

KLIER PARMENTER PRD

PRELIMINARY ROAD, GRADING AND STORM DRAINAGE PLAN

JEREMY L. SATHER
STATE OF WASHINGTON
45688
REGISTERED PROFESSIONAL ENGINEER

JOB NUMBER:	15-183
DRAWING NAME:	15183P-RD-PL
DESIGNER:	JLS
DRAFTING BY:	RCR
DATE:	2-04-16
SCALE:	1"=40'
JURISDICTION:	CITY OF MONROE

RD-02

SHEET 9 OF 13

A PORTION OF THE NE 1/4 & NW 1/4, SEC 31, TWN 28 N, RGE 7 E, W.M., SNOHOMISH COUNTY, WASHINGTON

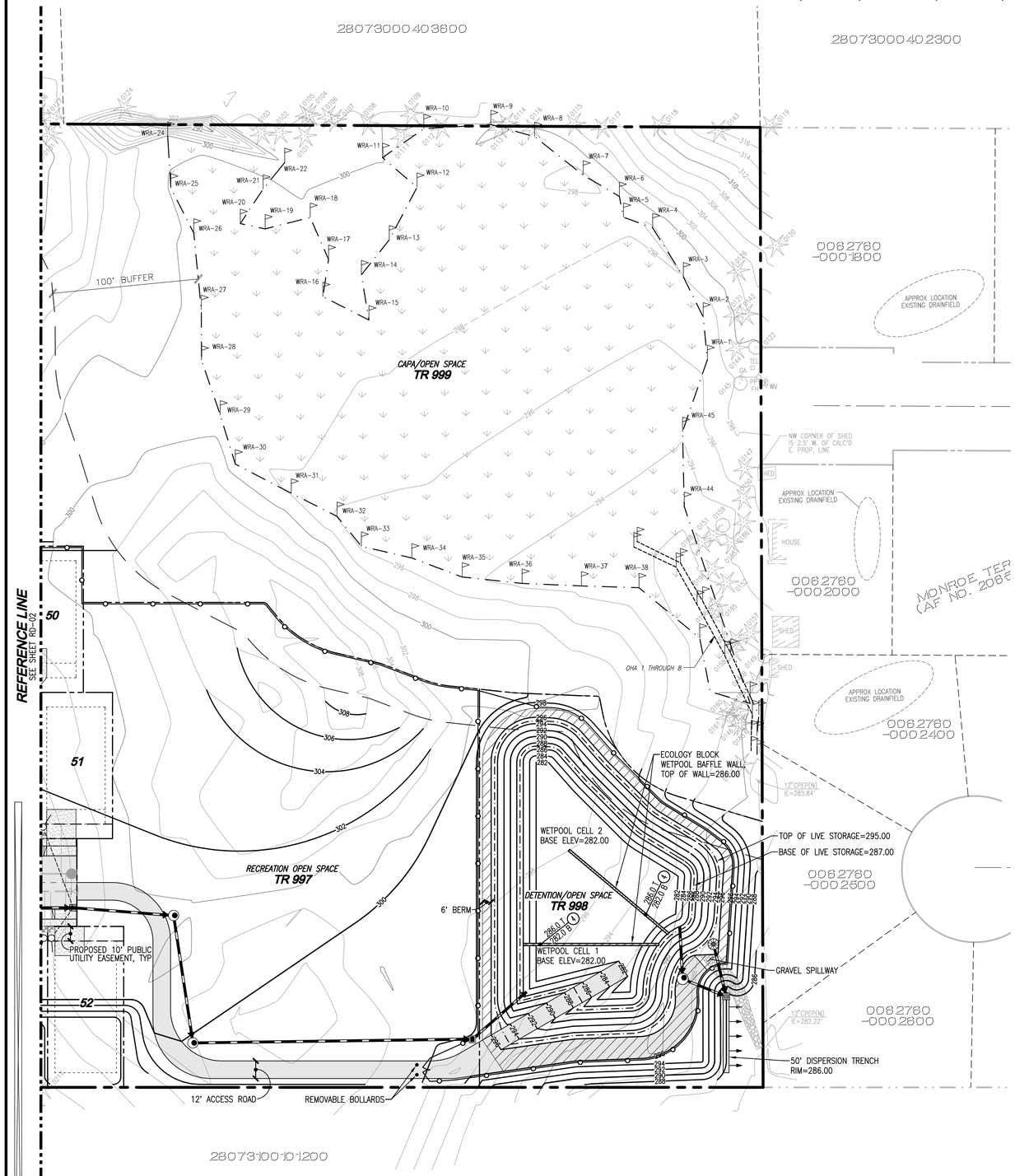

LEGEND

- STORM PIPE
- DRAIN PIPE
- SEWER PIPE
- WATER PIPE

SCALE: 1" = 40'

40' 0 40' 80'

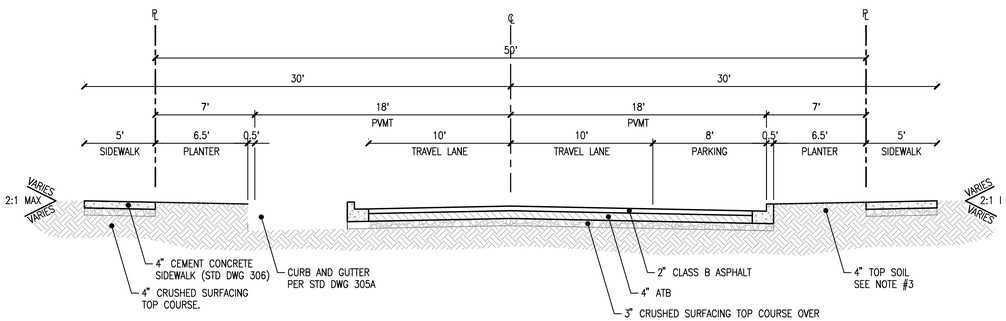

ROAD B, C AND D SECTION

SCALE: 1"=5'

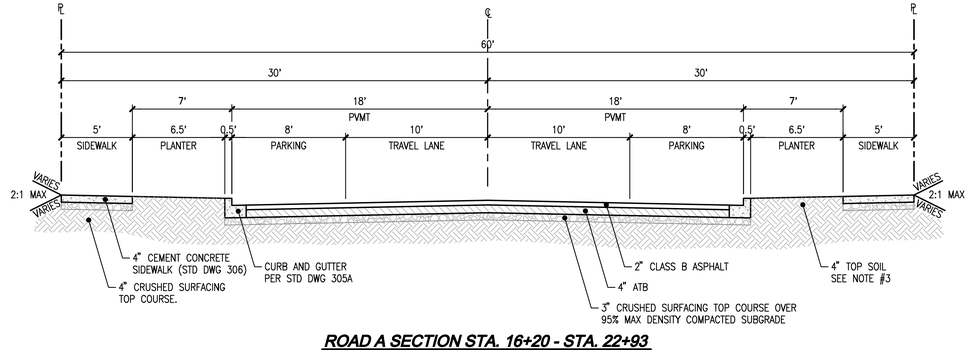

ROAD A SECTION STA. 16+20 - STA. 22+93

SCALE: 1"=5'

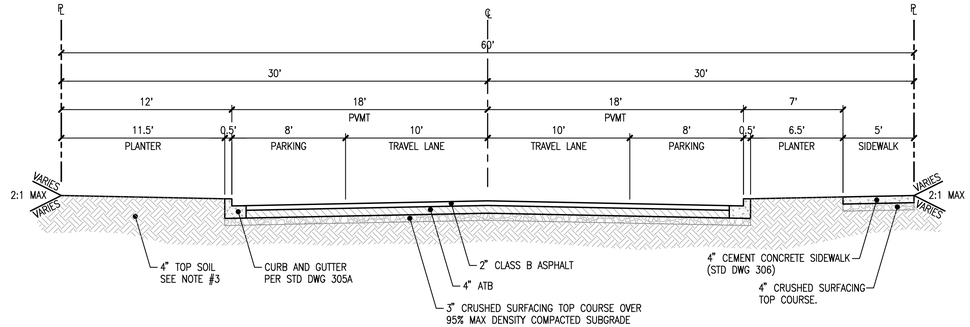

ROAD A SECTION STA. 10+00 - STA. 16+20

SCALE: 1"=5'

SURVEY DISCLAIMER

THE TOPOGRAPHIC SURVEY WAS PERFORMED BY LDC, INC. IN DECEMBER 2015. ANY CHANGES TO THE SITE AFTER THIS DATE WILL NOT BE REFLECTED IN THE PLANS. ANY DISCREPANCIES FOUND BETWEEN WHAT IS SHOWN ON THE PLANS AND WHAT IS NOTED IN THE FIELD SHOULD BE BROUGHT IMMEDIATELY TO THE ATTENTION OF THE ENGINEER.

Call 2 Business Days Before You Dig
811 or 1-800-424-5555
Utilities Underground Location Center

REVISIONS

NO.	DATE	DESCRIPTION	BY

LDC
THE CIVIL ENGINEERING GROUP
Engineering
Structural
Planning
Survey
14201 NE 200th St., #100
Woodinville, WA 98072
Ph.: 425.806.1869
Fx.: 425.482.2893
www.LDCcorp.com

TERSA TELLUS, INC

KLIER PARMENTER PRD

PRELIMINARY ROAD, GRADING AND STORM DRAINAGE PLAN

JEREMY L. SATHER
STATE OF WASHINGTON
45888
REGISTERED
PROFESSIONAL ENGINEER

JOB NUMBER:	15-183
DRAWING NAME:	15183P-RD-PL
DESIGNER:	JLS
DRAFTING BY:	RCR
DATE:	2-04-16
SCALE:	1"=40'
JURISDICTION:	CITY OF MONROE

RD-03

SHEET 10 OF 13

SECTION 2: RISK ASSESSMENT ANALYSIS AND TEMPORARY EROSION AND SEDIMENT CONTROL DESIGN

Temporary Erosion and Sediment Control

A Stormwater Pollution Prevention Plan (SWPPP) will be provided prior to construction. The SWPPP report is modeled under the guidelines of Volume II, Section 3 of the 2005 Stormwater Management Manual for Western Washington. Construction SWPPP Elements #1 through #12 are addressed below.

Element #1 – Mark Clearing Limits: All clearing limits will be delineated with high visibility plastic fence or silt fence. See sheets ER-01 of the construction plans for locations and details.

Element #2 – Establish Construction Access: Stabilized construction accesses will be installed as shown on the construction plans. See sheets ER-01 and ER-02 of the construction plans for locations and details (BMP C105).

Element #3 – Control Flow Rates: Detention of construction period runoff will be provided by the temporary sediment pond. The pond will provide sediment control as sediment-laden runoff is directed to the vaults. See sheets ER-01, SD-01, and of the construction plans for location and details of the pond, drainage system, and other flow and sediment control BMP's.

Element #4 – Install Sediment Controls: Silt fence, catch basin protection, the temporary sediment pond, waddles, and check dams will be utilized to contain sediments within the project's clearing limits. See sheets ER-01, ER-02 and ER-03 of the construction plans for locations and details.

Element #5 – Stabilize Soils: Exposed soils will be stabilized as specified in the Grading and Erosion Control Notes. See sheet ER-02 of the construction plans for notes.

Element #6 – Protect Slopes: Slopes shall be protected as specified under Element #5.

Element #7 – Protect Drain Inlets: Storm drain inlet protection and silt fencing will be utilized to contain sediments within the project's clearing limits. See sheets ER-01 and ER-02 of the construction plans for locations and details.

Element #8 – Stabilize Channels and Outlets: Temporary interceptor swales shall be stabilized with mulch or seeding. See temporary interceptor swale detail on sheet ER-02 of the construction plans

Element #9 – Control Pollutants: Pollutants shall be controlled as specified in the Pollutant Control Notes. See sheet ER-02 of the construction plans for notes.

Element #10 – Control De-Watering: Disposal options for de-watering water are as specified in the De-Watering Control Notes. See sheet ER-02 of the construction plans for notes.

Element #11 – Maintain BMPs: Maintenance of the BMPs is specified within the Construction Sequence and Grading and Erosion Control Notes. See sheets ER-01 and ER-02 of the construction plans for the Construction Sequence and notes.

Element #12: Manage the Project: The Grading and Erosion Control Notes specify seasonal work limitations. Maintenance of the BMPs is specified within the Construction Sequence and Grading and Erosion Control Notes. See sheets ER-01 and ER-02 of the construction plans for the Construction Sequence and notes.

SECTION 3: DOWNSTREAM ANALYSIS REPORT

Task 1. Study Area Definition and Maps

King County Bare Earth LiDAR, survey, and 2012 aerial photography were the best topographical references available for the area containing the site. The limits of the downstream analysis extend roughly 0.25 miles beyond the subject property's natural discharge location (See Figure 3.0, Downstream Analysis Map).

Task 2. Resource Review

All of the resources below have been reviewed for existing and potential issues near the project site:

- **Drainage Basin**
  This site is located within the Woods Creek watershed. Discharge from the proposed development will discharge into Wood Creek which feeds into the Skykomish River and eventually outlets into Snohomish River.

- **Floodplain / Floodway (FEMA) maps**
  According to FEMA floodplain mapping, the subject property is not within a floodplain. Reference the FEMA FIS study in appendix 3-B as necessary.

- **Critical Areas Map**
  Three wetlands are located on site.

- **Drainage Complaints**
  According to phone conversation with Vincent Burchland, City of Monroe, on May 4th 2016, there is record of known drainage complaints in the area. Development of the site will not exacerbate any existing drainage issues occurring on properties downstream from the subject property.

- **Road Drainage Problems**

  No issues were identified near the proposed site.

- **Soils**

  According to Geotechnical Evaluation, provided by Nelson Geotechnical Associates, Inc. on April 29th 2016, the site is underlain by native glacial till soils.

- **Wetland Inventory Maps**

  The project site contains three wetlands. One on the south west corner of parcel 28073100200901 (track 994), another in the south east corner of parcel 28073100200901(Track 996), and the last wetland located in the north east corner of parcel 28073100100400 (track 999).

- **Section 303d List of Polluted Waters**

  No listing for un-named creek that is directly downstream of the project site. That un-named creek feeds into Woods Creek which is listed for bacteria but, since there are no listings for phosphorus and Woods Creek isn't a fish habitat within the study distance, basic water quality is required.

- **Water Quality Problems**

  No known water quality problems are present onsite or downstream based on the Department of Ecology's Water Quality Assessment Map.

Task 3. Field Inspection/Downstream Analysis (See Figure 3.0, Appendix 3-A)

On May 4th, 2016, a Downstream Analyses was performed at the site. The weather was 57º Fahrenheit and rainy. The following observations were verified during the visit.

Onsite Basin

Onsite basin runoff flows from three separate flow paths. Flow path 1 discharges on the south east corner of the lot parcel 28073100200901 via overland flow into a wetland (tract 996)①. Flow path 2 travels overland flow across parcels 28073100100300, 28073100101600, and 28073100101500. Flow path 3 exits the site in the south east corner of parcel 28073100100400 and runoff then enters a channelized stream ② which enters a wetland along the north east corner of parcel 28073100101200. Flow path 3 then follows along 134th until it enters into a swale along 205th AVE SE ③ and flows through a culvert across the private drive on parcel 28073100100500. Flow paths 1, 2 and 3 converge prior to the 0.25 mile TDA assessment buffer. Flows then travel roughly an additional 0.5 miles and discharge into Wood Creek which feeds into the Skykomish River and eventually outlets into Snohomish River.

Task 4. Drainage System Description and Problem Descriptions

Based on the resources available and visual site inspection of the downstream flow path and discharge into the designated wetlands and streams, there is no evidence of existing or anticipated downstream drainage problems. All downstream appurtenances are adequately sized to sufficiently convey flows resulting from large storm events. No additional problems are foreseen due to the proposed development.

Task 5. Mitigation of Existing or Potential Drainage Problems (not applicable for Level 1 Analysis)

No evidence of existing or potential problems with upstream or downstream drainage conveyance infrastructure was found. Mitigation is not required.

APPENDIX 3-A
UPSTREAM AND DOWNSTREAM ANALYSIS PHOTO RECORD (SEE FIGURE 3.0 FOR DOWNSTREAM MAP)

15-183DownstreamAnalysisMap.mxd | MOD: 05/02/2016 | TPA

SOURCE INFORMATION

SOURCE AGENCY	DESCRIPTION
SNOHOMISH COUNTY GIS	PARCEL BOUNDARY
PUGET SOUND LIDAR CONSORTIUM	CONTOURS GENERATED FROM BARE EARTH LIDAR (KING COUNTY). THIS DATA HAS A STATED VERTICAL ACCURACY OF APPROXIMATELY 1 FOOT.

LDC
THE CIVIL ENGINEERING GROUP
Commercial
Infrastructure
Residential
14201 NE 200th St., #100
Woodinville, WA 98072
Ph. 425.806.1869
Fx. 425.482.2893
www.LDCcorp.com

TERSA TELLUS, INC.

KLIER PROPERTY

CURSORY DOWNSTREAM ANALYSIS MAP

PROJECTION: WASHINGTON STATE PLANE, NORTH ZONE, NAD 83 HARN, FEET

REVISION:
JOB NUMBER: 15-183
DRAWING NAME: 15-183F3.0
DESIGNER: D.WESTLEY
DRAWING BY: D.WESTLEY
DATE: 05-02-16
SCALE: AS SHOWN
JURISDICTION: MONROE

FIGURE:

3.0

Image ①: Looking downstream runoff from Flow path 1discharge into wetland located on parcel 28073100200901 and 28073100201500.

Image ②: Looking west at runoff discharge from Flow path 3 that forms into channelized flow on parcel 28073100101200.

Image ③: Looking downstream at channelized flow from Flow path 3 along 205th AVE NE which enters a culvert onto private property.

Drainage Basin Map:

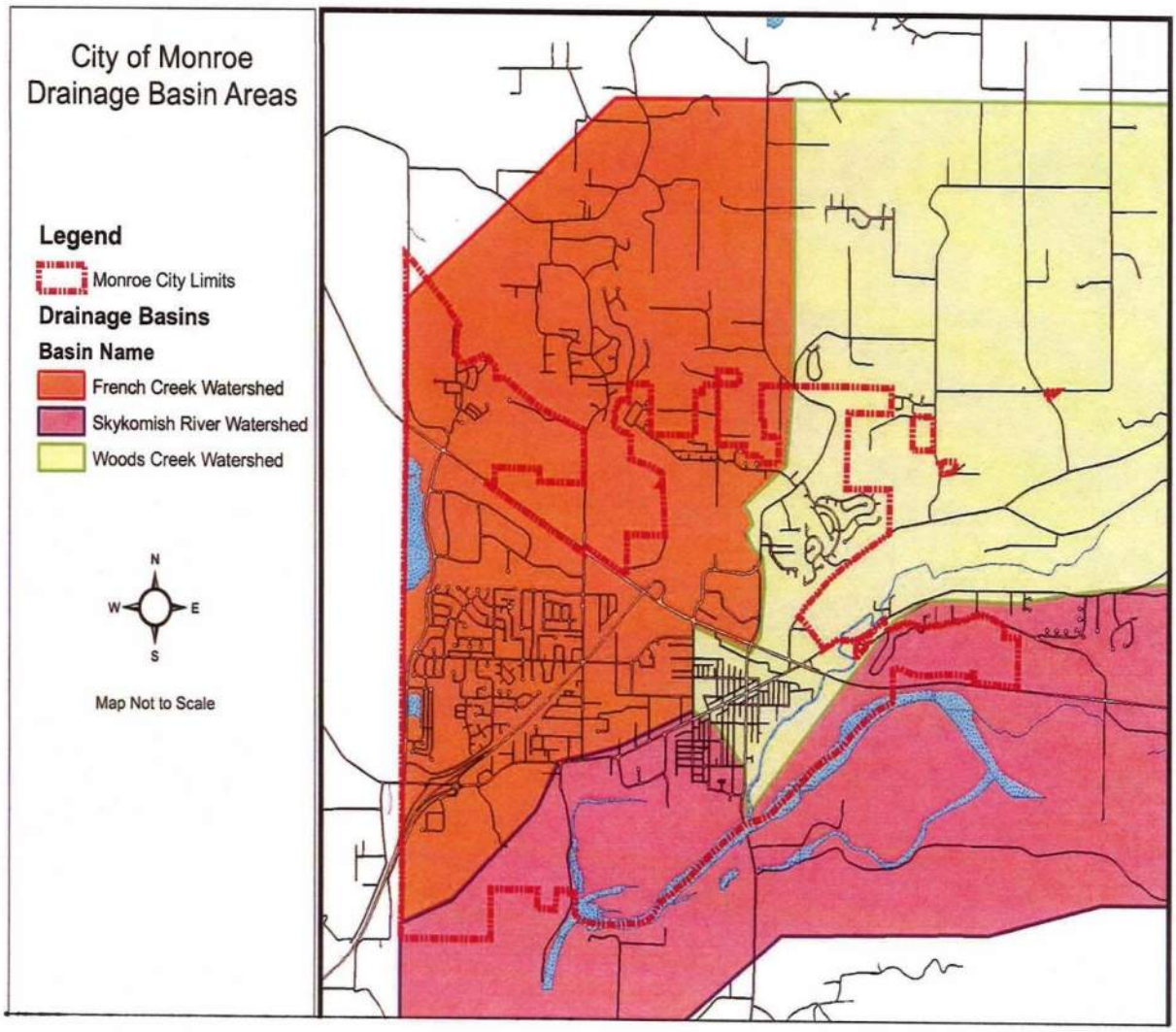

SECTION 4: DETENTION AND WATER QUALITY FACILITY ANALYSIS AND DESIGN

4.1 Pre-Developed Hydrology/Land Cover

The pre-developed conditions were modeled in WWHM for the purpose of detention sizing and flow-duration control. Based on the site location, the WWHM used the Everett Gage and a precipitation scale factor of 1.20.

The pre-developed condition (forested) is applied to all areas containing future improvements in the developed condition. Frontage areas where improvements are proposed are modeled as forested. For visual representation of the following basins, see Figure 4.0, "Predeveloped Hydrology Map". The values as modeled in WWHM are as follows:

Onsite and Frontage Basin:

TOTAL ONSITE ACREAGE:	26.38 Acres
Undisturbed/Wetlands:	7.87 Acres
Modeled Area North Basin:	13.08 Acres
Modeled Area South Basin:	5.43 Acres
Modeled Frontage Basin:	0.31 Acres
Total Modeled Area (Forested):	18.82 Acres

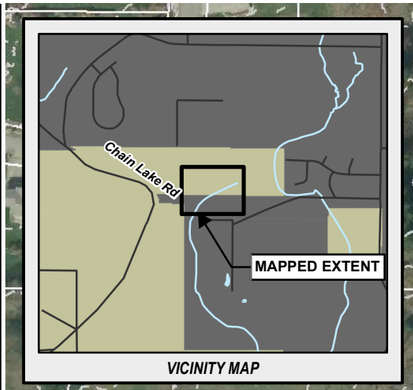

VICINITY MAP

PREDEVELOPED BASIN AREAS

BASIN A TOTAL	
FORESTED	18.82 AC
TOTAL =	18.82 AC

WETLAND (TYP)

WETLAND BUFFER (TYP)

BASIN A
18.82 AC

CHAIN LAKE ROAD

LEGEND

- Subject Property
- Watercourse

Contours (LiDAR)

- 2 Foot Contour

0 200 400

Scale in Feet

SOURCE INFORMATION

SOURCE AGENCY	DESCRIPTION
SNOHOMISH COUNTY GIS	PARCEL BOUNDARY
PUGET SOUND LIDAR CONSORTIUM	CONTOURS GENERATED FROM BARE EARTH LIDAR (KING COUNTY). THIS DATA HAS A STATED VERTICAL ACCURACY OF APPROXIMATELY 1 FOOT.

LDC
THE CIVIL ENGINEERING GROUP
Commercial
Infrastructure
Residential
14201 NE 200th St., #100
Woodinville, WA 98072
Ph. 425.806.1869
Fx. 425.482.2893
www.LDCcorp.com

TERSA TELLUS, INC.

KLIER PROPERTY

PREDEVELOPED HYDROLOGY MAP

PROJECTION: WASHINGTON STATE PLANE, NORTH ZONE, NAD 83 HARN, FEET

REVISION:	
JOB NUMBER:	15-183
DRAWING NAME:	15-183F4.0
DESIGNER:	T.ABBOTT
DRAWING BY:	T.ABBOTT
DATE:	05-04-16
SCALE:	AS SHOWN
JURISDICTION:	MONROE

FIGURE:
4.0

15-183PredevelopedBasinsMap.mxd | MOD: 05/04/2016 | TPA

4.2 Developed Site Hydrology

The developed conditions were modeled in WWHM for the purpose of detention sizing and flow-duration control. Based on the site location, the WWHM used the Everett Gage and a precipitation scale factor of 1.20. For visual representation of the following basins, see Figure 5.0, "Developed Hydrology Map". The values as modeled in WWHM are as follows:

North Basin:

The North Basin is comprised of the onsite has been modeled using WWHM with the following areas and ground cover designations:

DEVELOPED CONDITIONS	
GROUND COVER	AREA(acre)
Lawn	5.35
Impervious	7.73
TOTAL ACRES	**13.08**

South Basin:

The South Basin is comprised of onsite areas and also includes a portion of the frontage road that can be collected has been modeled using WWHM with the following areas and ground cover designations:

DEVELOPED CONDITIONS	
GROUND COVER	AREA(acre)
Lawn	2.16
Impervious	3.27
TOTAL ACRES	**5.43**

Frontage Basin:

A separate frontage basin has been established to detain and treat all flows not routed to the southern basin detention wetpond. Target surface areas have been balanced by use of water quality tributary trade and detention tributary trade. The end result is that treatment and detention has been provided for areas equal, or more than, all newly developed surfaces. Frontage basin improvements along Chain Lake Road were modeled using WWHM with the following areas and ground cover designations:

DEVELOPED CONDITIONS	
GROUND COVER	AREA(acre)
Lawn	0.17
Impervious	0.14
TOTAL ACRES	**0.31**

Undisturbed Areas:

Undisturbed areas include all onsite areas that will remain unaltered and consistent with the native condition in the post-developed condition. These areas mostly include onsite wetland area and wetland buffers:

DEVELOPED CONDITIONS	
GROUND COVER	AREA(acre)
Forested	7.87
TOTAL ACRES	**7.87**

Offsite Upstream Basin:

In the developed condition the Offsite Upstream Basin will be collected, conveyed, and dispersed to the basin's predeveloped downstream flow path. The upstream basin will be quantified in forthcoming submittals.

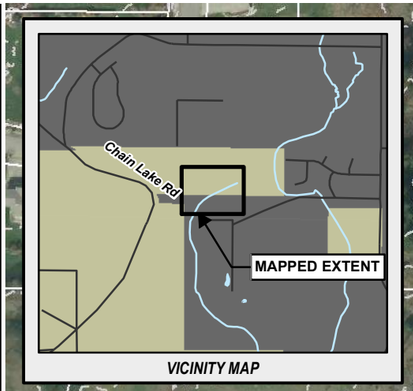

VICINITY MAP

DEVELOPED BASIN AREAS

NORTH BASIN TOTAL	
LAWN	*5.35 AC*
IMPERVIOUS	*7.73 AC*
TOTAL =	*13.08 AC*
SOUTH BASIN TOTAL	
LAWN	*2.16 AC*
IMPERVIOUS	*3.27 AC*
TOTAL =	*5.43 AC*
FRONTAGE BASIN TOTAL	
LAWN	*0.17 AC*
IMPERVIOUS	*0.14 AC*
TOTAL =	*0.31 AC*

WETLAND (TYP)

WETLAND BUFFER (TYP)

NORTH BASIN
13.08 AC

CHAIN LAKE ROAD

SOUTH BASIN
5.43 AC

FRONTAGE BASIN
0.31 AC

LEGEND

- *Subject Property*
- *Parcel Boundary*
- *Proposed Catch Basin*
- *Proposed Storm Network*

Contours (LiDAR)

- *2 Foot Contour*

0 200 400
Scale in Feet

N

SOURCE INFORMATION

SOURCE AGENCY	DESCRIPTION
SNOHOMISH COUNTY GIS	PARCEL BOUNDARY
PUGET SOUND LIDAR CONSORTIUM	CONTOURS GENERATED FROM BARE EARTH LIDAR (KING COUNTY). THIS DATA HAS A STATED VERTICAL ACCURACY OF APPROXIMATELY 1 FOOT.

LDC
THE CIVIL ENGINEERING GROUP
14201 NE 200th St., #100
Woodinville, WA 98072
Ph. 425.806.1869
Fx. 425.482.2893
www.LDCcorp.com

Commercial
Infrastructure
Residential

TERSA TELLUS, INC.

KLIER PROPERTY

DEVELOPED HYDROLOGY MAP

PROJECTION: WASHINGTON STATE PLANE, NORTH ZONE, NAD 83 HARN, FEET

REVISION:
JOB NUMBER: 15-183
DRAWING NAME: 15-183F5.0
DESIGNER: T.ABBOTT
DRAWING BY: T.ABBOTT
DATE: 05-04-16
SCALE: AS SHOWN
JURISDICTION: MONROE

FIGURE:
5.0

15-183DevelopedBasinsMap.mxd | MOD: 05/04/2016 | TPA

4.3 Detention and Water Quality

The proposed detention and water quality facilities have been designed to closely meet or exceed all applicable requirements and design recommendations as prescribed in the DOE Technical Manual. More specifically the following is a list of all the detention and water quality facilities and their corresponding DOE Technical Manual requirements:

2005 DOE Technical Manual Reference Summary		
Location	**Facility**	**DOE Technical Manual**
North Basin & South Basin	Detention Pond	Vol. III 3.2.1
North Basin & South Basin	Wetpond (WQ Wetpool)	Vol. V Chapter 10
Frontage Basin	Detention Tanks	Vol. III 3.2.2
Frontage Basin	StormFilter Vault	Vol. V 12.6.1
Developed Areas – Lawn	Post-Construction Soil Quality and Depth	Vol V BMP T5.13
North Basin & South Basin	Downspout Dispersion	Vol V BMP T5.10

The proposed pond detention facility was designed in with the following flow control evaluation parameters:

> *"Flow duration is computed by counting the number of flow values that exceed a specified flow level. The specified flow levels used by WWHM in the flow duration analysis are listed below.*
>
> *1. 50% of the 2-year predevelopment peak flow.*
> *2. 100% of the 2-year predevelopment peak flow.*
> *3. 100% of the 50-year predevelopment peak flow.*
>
> *There are three criteria by which flow duration values are compared:*
>
> *1. If the post development flow duration values exceed any of the predevelopment flow levels between 50% and 100% of the 2-year predevelopment peak flow values (100 Percent Threshold) then the flow duration requirement has not been met.*
> *2. If the post development flow duration values exceed any of the predevelopment flow levels between 100% of the 2-year and 100% of the 50-year predevelopment peak flow values more than 10 percent of the time (110 Percent Threshold) then the flow duration requirement has not been met.*
> *3. If more than 50 percent of the flow duration levels exceed the 100 percent threshold then the flow duration requirement has not been met."*

North Wetpond:

The north detention wetpond provides flow control for the north tributary northern basin and has been design per the DOE Technical Manual, section 3.2.1. The wetpond detention facility was modeled as a pond in WWHM using the following:

WWHM Modeled Pond

Bottom Length:	118’
Bottom Width:	118’
Pond Bottom Area:	13,924 ft^2
Pond Internal Sides:	2:1
Begin Live Storage:	287.00
Effective Storage Depth:	9.0’
Riser Height:	8.0’
Freeboard:	1.0’
Top of Riser Elevation:	295.00
Top of Berm Elevation:	296.00

The cumulative live storage volumes have been calculated at various stage storage elevations for both the required volumes as modeled in WWHM and the provided volumes as designed (see below). This cumulative volume comparison proves that the pond as designed provides sufficient stage storage volume to perform as modeled in WWHM.

North Pond Detention Volume		
Stage (feet / ELEV)	**Required (CF)**	**Provided (CF)**
1 / 288	14,375	15,511
3 / 290	46,130	50,288
5 / 292	82,067	90,241
7 / 294	122,404	135,604
8 / 295	136,342	160,328

Basic water quality treatment for the north basin is provided by a basic wetpond per the DOE Technical Manual Volume V, Chapter 10, BMP T10.10.

Wetpool Volume		
Pond	**Required (CF)**	**Provided (CF)**
North Pond	48,700 CF	49,588

WWHM4
PROJECT REPORT

Project Name: NorthBasin_2to1
Site Name:
Site Address:
City :
Report Date: 5/3/2016
Gage : Everett
Data Start : 1948/10/01
Data End : 1997/09/30
Precip Scale: 1.20
Version Date: 2015/12/15

Low Flow Threshold for POC 1 : 50 Percent of the 2 Year

High Flow Threshold for POC 1: 50 year

PREDEVELOPED LAND USE

Name : North Basin
Bypass: No

GroundWater: No

Pervious Land Use	acre
C, Forest, Steep	13.08
Pervious Total	13.08

Impervious Land Use	acre
Impervious Total	0
Basin Total	13.08

Element Flows To:

Surface	Interflow	Groundwater

MITIGATED LAND USE

Name : North Basin
Bypass: No

GroundWater: No

Pervious Land Use	acre

C, Lawn, Flat	**5.35**
Pervious Total	**5.35**

Impervious Land Use	**acre**
ROADS FLAT	**7.73**
Impervious Total	**7.73**
Basin Total	**13.08**

Element Flows To:

Surface	**Interflow**	**Groundwater**
North Pond	North Pond	

Name : North Pond
Bottom Length: 118.00 ft.
Bottom Width: 118.00 ft.
Depth: 9 ft.
Volume at riser head: 3.3652 acre-feet.
Side slope 1: 2 To 1
Side slope 2: 2 To 1
Side slope 3: 2 To 1
Side slope 4: 2 To 1
Discharge Structure
Riser Height: 8 ft.
Riser Diameter: 18 in.
Notch Type: Rectangular
Notch Width: 0.027 ft.
Notch Height: 5.160 ft.
Orifice 1 Diameter: 2.5 in. **Elevation:** 0 ft.

Element Flows To:

Outlet 1	**Outlet 2**

Pond Hydraulic Table

Stage(feet)	Area(ac.)	Volume(ac-ft.)	Discharge(cfs)	Infilt(cfs)	
0.0000	0.319	0.000	0.000	0.000	
0.1000	0.321	0.032	0.053	0.000	
0.2000	0.324	0.064	0.075	0.000	
0.3000	0.326	0.096	0.092	0.000	
0.4000	0.328	0.129	0.107	0.000	
0.5000	0.330	0.162	0.119	0.000	
0.6000	0.332	0.195	0.131	0.000	
0.7000	0.335	0.229	0.141	0.000	
0.8000	0.337	0.262	0.151	0.000	
0.9000	0.339	0.296	0.160	0.000	Stage 1.0’ = 0.330 ac-ft
1.0000	0.341	0.330	0.169	0.000	ELEV = 288: Vol=14,375 CF

1.1000	0.343	0.364	0.177	0.000	
1.2000	0.346	0.399	0.185	0.000	
1.3000	0.348	0.434	0.193	0.000	
1.4000	0.350	0.469	0.200	0.000	
1.5000	0.353	0.504	0.207	0.000	
1.6000	0.355	0.539	0.214	0.000	
1.7000	0.357	0.575	0.221	0.000	
1.8000	0.359	0.611	0.227	0.000	
1.9000	0.362	0.647	0.233	0.000	
2.0000	0.364	0.683	0.239	0.000	
2.1000	0.366	0.720	0.245	0.000	
2.2000	0.369	0.757	0.251	0.000	
2.3000	0.371	0.794	0.257	0.000	
2.4000	0.373	0.831	0.262	0.000	
2.5000	0.376	0.868	0.268	0.000	
2.6000	0.378	0.906	0.273	0.000	
2.7000	0.380	0.944	0.278	0.000	
2.8000	0.383	0.982	0.283	0.000	
2.9000	0.385	1.021	0.290	0.000	
3.0000	0.388	1.059	0.299	0.000	Stage 3.0’ = 1.059 ac-ft
3.1000	0.390	1.098	0.310	0.000	ELEV = 290: Vol=46,130 CF
3.2000	0.392	1.137	0.321	0.000	
3.3000	0.395	1.177	0.333	0.000	
3.4000	0.397	1.216	0.346	0.000	
3.5000	0.400	1.256	0.359	0.000	
3.6000	0.402	1.296	0.372	0.000	
3.7000	0.404	1.337	0.385	0.000	
3.8000	0.407	1.377	0.399	0.000	
3.9000	0.409	1.418	0.413	0.000	
4.0000	0.412	1.459	0.429	0.000	
4.1000	0.414	1.501	0.445	0.000	
4.2000	0.417	1.542	0.462	0.000	
4.3000	0.419	1.584	0.519	0.000	
4.4000	0.422	1.626	0.541	0.000	
4.5000	0.424	1.669	0.563	0.000	
4.6000	0.427	1.711	0.586	0.000	
4.7000	0.429	1.754	0.609	0.000	
4.8000	0.432	1.797	0.633	0.000	
4.9000	0.434	1.840	0.657	0.000	
5.0000	0.437	1.884	0.681	0.000	Stage 5.0’ = 1.884 ac-ft
5.1000	0.439	1.928	0.706	0.000	ELEV = 292: Vol=82,067 CF
5.2000	0.442	1.972	0.732	0.000	
5.3000	0.444	2.016	0.758	0.000	
5.4000	0.447	2.061	0.784	0.000	
5.5000	0.450	2.106	0.811	0.000	
5.6000	0.452	2.151	0.838	0.000	
5.7000	0.455	2.196	0.865	0.000	
5.8000	0.457	2.242	0.893	0.000	
5.9000	0.460	2.288	0.922	0.000	
6.0000	0.462	2.334	0.950	0.000	
6.1000	0.465	2.380	0.979	0.000	
6.2000	0.468	2.427	1.009	0.000	
6.3000	0.470	2.474	1.039	0.000	
6.4000	0.473	2.521	1.069	0.000	
6.5000	0.476	2.569	1.099	0.000	
6.6000	0.478	2.616	1.130	0.000	
6.7000	0.481	2.664	1.161	0.000	

6.8000	0.484	2.713	1.193	0.000	
6.9000	0.486	2.761	1.225	0.000	
7.0000	0.489	2.810	1.257	0.000	Stage 7.0'= 1.884 ac-ft
7.1000	0.492	2.859	1.290	0.000	ELEV= 294: Vol=122,404 CF
7.2000	0.494	2.908	1.322	0.000	
7.3000	0.497	2.958	1.356	0.000	
7.4000	0.500	3.008	1.389	0.000	
7.5000	0.502	3.058	1.423	0.000	
7.6000	0.505	3.109	1.457	0.000	
7.7000	0.508	3.159	1.491	0.000	
7.8000	0.511	3.210	1.526	0.000	
7.9000	0.513	3.261	1.561	0.000	
8.0000	0.516	3.313	1.596	0.000	Stage 8.0' = 3.13 ac-ft
8.1000	0.519	3.365	2.102	0.000	ELEV= 295: Vol=136,342 CF
8.2000	0.522	3.417	3.007	0.000	
8.3000	0.524	3.469	4.107	0.000	
8.4000	0.527	3.522	5.241	0.000	
8.5000	0.530	3.575	6.250	0.000	
8.6000	0.533	3.628	7.015	0.000	
8.7000	0.536	3.681	7.510	0.000	
8.8000	0.538	3.735	7.958	0.000	
8.9000	0.541	3.789	8.346	0.000	
9.0000	0.544	3.843	8.712	0.000	
9.1000	0.547	3.898	9.061	0.000	

ANALYSIS RESULTS

Predeveloped Landuse Totals for POC #1
Total Pervious Area:13.08
Total Impervious Area:0

Mitigated Landuse Totals for POC #1
Total Pervious Area:5.35
Total Impervious Area:7.73

Flow Frequency Return Periods for Predeveloped. POC #1

Return Period	Flow(cfs)
2 year	0.615566
5 year	0.893815
10 year	1.108664
25 year	1.417412
50 year	1.676096
100 year	1.960758

Flow Frequency Return Periods for Mitigated. POC #1

Return Period	Flow(cfs)
2 year	0.406489
5 year	0.580934
10 year	0.719577
25 year	0.923769

50 year	1.098781
100 year	1.295045

Annual Peaks for Predeveloped and Mitigated. POC #1

Year	Predeveloped	Mitigated
1949	0.425	0.346
1950	1.050	0.386
1951	0.434	0.308
1952	0.462	0.265
1953	0.602	0.278
1954	0.949	0.410
1955	0.972	0.534
1956	0.646	0.544
1957	0.970	0.648
1958	1.241	0.362
1959	0.610	0.412
1960	0.570	0.534
1961	0.812	0.422
1962	0.883	0.375
1963	1.349	0.311
1964	0.575	0.299
1965	0.462	0.411
1966	0.345	0.296
1967	0.713	0.332
1968	0.833	0.597
1969	1.143	0.306
1970	0.399	0.300
1971	0.586	0.528
1972	0.697	0.459
1973	0.404	0.372
1974	0.528	0.369
1975	0.487	0.290
1976	0.405	0.430
1977	0.408	0.303
1978	0.440	0.263
1979	1.321	0.489
1980	0.501	0.278
1981	0.542	0.320
1982	0.562	0.700
1983	0.568	0.331
1984	0.527	0.622
1985	0.719	0.522
1986	1.567	1.299
1987	0.728	0.836
1988	0.437	0.537
1989	0.697	0.242
1990	0.484	0.538
1991	0.516	0.465
1992	0.523	0.416
1993	0.374	0.290
1994	0.349	0.408
1995	0.510	0.590
1996	0.994	0.583
1997	1.997	1.679

Ranked Annual Peaks for Predeveloped and Mitigated. POC #1

Rank	Predeveloped	Mitigated
1	1.9973	1.6794
2	1.5672	1.2991
3	1.3493	0.8362
4	1.3208	0.6997
5	1.2408	0.6481
6	1.1427	0.6224
7	1.0500	0.5969
8	0.9942	0.5902
9	0.9724	0.5832
10	0.9697	0.5441
11	0.9485	0.5384
12	0.8826	0.5368
13	0.8330	0.5342
14	0.8121	0.5336
15	0.7281	0.5279
16	0.7194	0.5220
17	0.7134	0.4890
18	0.6971	0.4646
19	0.6969	0.4590
20	0.6456	0.4303
21	0.6102	0.4219
22	0.6020	0.4160
23	0.5862	0.4123
24	0.5754	0.4115
25	0.5698	0.4101
26	0.5681	0.4075
27	0.5616	0.3858
28	0.5423	0.3753
29	0.5281	0.3723
30	0.5266	0.3686
31	0.5225	0.3616
32	0.5164	0.3461
33	0.5096	0.3317
34	0.5013	0.3306
35	0.4871	0.3195
36	0.4841	0.3109
37	0.4624	0.3082
38	0.4616	0.3056
39	0.4395	0.3031
40	0.4366	0.2998
41	0.4342	0.2991
42	0.4250	0.2957
43	0.4083	0.2901
44	0.4046	0.2897
45	0.4042	0.2779
46	0.3994	0.2776
47	0.3744	0.2648
48	0.3486	0.2631
49	0.3452	0.2416

POC #1
The Facility PASSED

The Facility PASSED.

Flow(cfs)	Predev	Mit	Percentage	Pass/Fail
0.3078	2602	2628	100	Pass
0.3216	2290	2229	97	Pass
0.3354	2027	1913	94	Pass
0.3492	1778	1614	90	Pass
0.3631	1571	1360	86	Pass
0.3769	1377	1151	83	Pass
0.3907	1201	959	79	Pass
0.4045	1055	821	77	Pass
0.4184	934	703	75	Pass
0.4322	807	623	77	Pass
0.4460	718	550	76	Pass
0.4598	641	463	72	Pass
0.4736	571	435	76	Pass
0.4875	521	410	78	Pass
0.5013	448	385	85	Pass
0.5151	399	362	90	Pass
0.5289	368	321	87	Pass
0.5427	331	263	79	Pass
0.5566	298	228	76	Pass
0.5704	260	203	78	Pass
0.5842	233	180	77	Pass
0.5980	215	161	74	Pass
0.6119	201	148	73	Pass
0.6257	187	138	73	Pass
0.6395	166	127	76	Pass
0.6533	157	122	77	Pass
0.6671	142	116	81	Pass
0.6810	133	112	84	Pass
0.6948	126	105	83	Pass
0.7086	118	100	84	Pass
0.7224	113	98	86	Pass
0.7362	108	95	87	Pass
0.7501	104	91	87	Pass
0.7639	98	89	90	Pass
0.7777	96	85	88	Pass
0.7915	93	83	89	Pass
0.8054	92	78	84	Pass
0.8192	87	74	85	Pass
0.8330	85	70	82	Pass
0.8468	82	67	81	Pass
0.8606	79	66	83	Pass
0.8745	76	61	80	Pass
0.8883	72	59	81	Pass
0.9021	69	57	82	Pass
0.9159	67	56	83	Pass
0.9297	64	54	84	Pass
0.9436	61	53	86	Pass
0.9574	58	51	87	Pass
0.9712	56	51	91	Pass
0.9850	54	50	92	Pass
0.9989	53	47	88	Pass
1.0127	51	46	90	Pass
1.0265	50	44	88	Pass
1.0403	50	43	86	Pass
1.0541	47	41	87	Pass

1.0680	46	40	86	Pass
1.0818	46	38	82	Pass
1.0956	46	36	78	Pass
1.1094	44	36	81	Pass
1.1232	43	34	79	Pass
1.1371	42	33	78	Pass
1.1509	40	33	82	Pass
1.1647	39	32	82	Pass
1.1785	37	31	83	Pass
1.1923	37	28	75	Pass
1.2062	36	27	75	Pass
1.2200	35	27	77	Pass
1.2338	31	26	83	Pass
1.2476	29	25	86	Pass
1.2615	29	24	82	Pass
1.2753	27	23	85	Pass
1.2891	25	22	88	Pass
1.3029	24	21	87	Pass
1.3167	23	20	86	Pass
1.3306	22	20	90	Pass
1.3444	22	19	86	Pass
1.3582	17	18	105	Pass
1.3720	15	16	106	Pass
1.3858	15	14	93	Pass
1.3997	15	13	86	Pass
1.4135	14	12	85	Pass
1.4273	12	10	83	Pass
1.4411	12	8	66	Pass
1.4550	12	8	66	Pass
1.4688	10	8	80	Pass
1.4826	9	7	77	Pass
1.4964	7	6	85	Pass
1.5102	7	6	85	Pass
1.5241	7	6	85	Pass
1.5379	7	4	57	Pass
1.5517	5	3	60	Pass
1.5655	5	3	60	Pass
1.5793	4	2	50	Pass
1.5932	3	2	66	Pass
1.6070	2	2	100	Pass
1.6208	2	2	100	Pass
1.6346	2	2	100	Pass
1.6485	2	2	100	Pass
1.6623	1	1	100	Pass
1.6761	1	1	100	Pass

Water Quality BMP Flow and Volume for POC #1
On-line facility volume: 1.118 **acre-feet = 48,700 CF**
On-line facility target flow: 1.3401 **cfs.**
Adjusted for 15 min: 1.443 **cfs.**
Off-line facility target flow: 0.7561 **cfs.**
Adjusted for 15 min: 0.8142 **cfs.**

Perlnd and Implnd Changes

No changes have been made.

This program and accompanying documentation are provided 'as-is' without warranty of any kind. The entire risk regarding the performance and results of this program is assumed by End User. Clear Creek Solutions Inc. and the governmental licensee or sublicensees disclaim all warranties, either expressed or implied, including but not limited to implied warranties of program and accompanying documentation. In no event shall Clear Creek Solutions Inc. be liable for any damages whatsoever (including without limitation to damages for loss of business profits, loss of business information, business interruption, and the like) arising out of the use of, or inability to use this program even if Clear Creek Solutions Inc. or their authorized representatives have been advised of the possibility of such damages. Software Copyright © by : Clear Creek Solutions, Inc. 2005-2016; All Rights Reserved.

South Wetpond:

The south detention wetpond provides flow control for the tributary Southern basin and has been design per the DOE Technical Manual, section 3.2.1. The wetpond detention facility was modeled as a pond in WWHM using the following:

WWHM Modeled Pond

Bottom Length:	92.40'
Bottom Width:	92.40'
Pond Bottom Area:	8,538 ft^2
Pond Internal North Side:	2:1
Pond Internal South Side:	Vertical
Pond Internal East Side:	Vertical
Pond Internal West Side:	Vertical
Begin Live Storage:	271.50
Effective Storage Depth:	7.5'
Riser Height:	7.0'
Freeboard:	0.5'
Top of Riser Elevation:	278.5
Top of Wall/Berm ELEV:	279.5

The cumulative live storage volumes have been calculated at various stage storage elevations for both the required volumes as modeled in WWHM and the provided volumes as designed (see below). This cumulative volume comparison proves that the pond as designed provides sufficient stage storage volume to perform as modeled in WWHM.

South Pond Detention Volume		
Stage (feet / ELEV)	**Required (CF)**	**Provided (CF)**
0.5 /272	4,280	5,013
2.5 / 274	21,921	25,770
4.5 / 276	40,288	47,591
6.5 / 278	59,394	70,385
7.0 / 278.5	64,284	76,253

Basic water quality treatment for the south basin is provided by a basic wetpond per the DOE Technical Manual Volume V, Chapter 10, BMP T10.10.

Wetpool Volume		
Pond	**Required (CF)**	**Provided (CF)**
South Pond	20,577 CF	21,437

WWHM4
PROJECT REPORT

Project Name: 20160418_SouthBasinPrelim
Site Name:
Site Address:
City :
Report Date: 5/3/2016
Gage : Everett
Data Start : 1948/10/01
Data End : 1997/09/30
(adjusted) **Precip Scale:** 0.00
Version Date: 2015/12/15

Low Flow Threshold for POC 1 : 50 Percent of the 2 Year

High Flow Threshold for POC 1: 50 year

PREDEVELOPED LAND USE

Name : South Basin
Bypass: No

GroundWater: No

Pervious Land Use	acre
C, Forest, Steep	5.43
Pervious Total	5.43

Impervious Land Use	acre
Impervious Total	0
Basin Total	5.43

Element Flows To:

Surface	Interflow	Groundwater

MITIGATED LAND USE

Name : Basin 1
Bypass: No

GroundWater: No

Pervious Land Use	acre

C, Lawn, Flat	**2.16**
Pervious Total	**2.16**

Impervious Land Use	**acre**
ROADS FLAT	**3.27**
Impervious Total	**3.27**
Basin Total	**5.43**

Element Flows To:

Surface	**Interflow**	**Groundwater**
Trapezoidal Pond 1	Trapezoidal Pond 1	

Name : Trapezoidal Pond 1
Bottom Length: 92.40 ft.
Bottom Width: 92.40 ft.
Depth: 8 ft.
Volume at riser head: 1.4810 acre-feet.
Side slope 1: 0 To 1
Side slope 2: 0 To 1
Side slope 3: 0 To 1
Side slope 4: 2 To 1
Discharge Structure
Riser Height: 7 ft.
Riser Diameter: 18 in.
Notch Type: Rectangular
Notch Width: 0.013 ft.
Notch Height: 5.010 ft.
Orifice 1 Diameter: 1.65625 in. **Elevation:** 0 ft.

Element Flows To:

Outlet 1	**Outlet 2**

Pond Hydraulic Table

Stage(feet)	Area(ac.)	Volume(ac-ft.)	Discharge(cfs)	Infilt(cfs)	
0.0000	0.196	0.000	0.000	0.000	
0.0889	0.196	0.017	0.022	0.000	
0.1778	0.196	0.034	0.031	0.000	
0.2667	0.197	0.052	0.038	0.000	
0.3556	0.197	0.070	0.044	0.000	
0.4444	0.197	0.087	0.049	0.000	Stage 0.5'= 0.098 ac-ft
0.5333	0.198	0.105	0.054	0.000	ELEV = 272: Vol = 4,280 CF
0.6222	0.198	0.122	0.058	0.000	
0.7111	0.199	0.140	0.062	0.000	
0.8000	0.199	0.158	0.066	0.000	
0.8889	0.199	0.175	0.070	0.000	

0.9778	0.200	0.193	0.073	0.000	
1.0667	0.200	0.211	0.076	0.000	
1.1556	0.200	0.229	0.080	0.000	
1.2444	0.201	0.247	0.083	0.000	
1.3333	0.201	0.265	0.086	0.000	
1.4222	0.202	0.283	0.088	0.000	
1.5111	0.202	0.301	0.091	0.000	
1.6000	0.202	0.319	0.094	0.000	
1.6889	0.203	0.337	0.096	0.000	
1.7778	0.203	0.355	0.099	0.000	
1.8667	0.203	0.373	0.101	0.000	
1.9556	0.204	0.391	0.104	0.000	
2.0444	0.204	0.409	0.107	0.000	
2.1333	0.205	0.427	0.111	0.000	
2.2222	0.205	0.446	0.115	0.000	
2.3111	0.205	0.464	0.120	0.000	
2.4000	0.206	0.482	0.125	0.000	
2.4889	0.206	0.501	0.131	0.000	Stage 2.5’vol= 0.503 ac-ft
2.5778	0.206	0.519	0.136	0.000	ELEV 274: V = 21,921 CF
2.6667	0.207	0.537	0.142	0.000	
2.7556	0.207	0.556	0.147	0.000	
2.8444	0.208	0.574	0.153	0.000	
2.9333	0.208	0.593	0.159	0.000	
3.0222	0.208	0.611	0.165	0.000	
3.1111	0.209	0.630	0.171	0.000	
3.2000	0.209	0.648	0.178	0.000	
3.2889	0.210	0.667	0.185	0.000	
3.3778	0.210	0.686	0.192	0.000	
3.4667	0.210	0.705	0.219	0.000	
3.5556	0.211	0.723	0.228	0.000	
3.6444	0.211	0.742	0.238	0.000	
3.7333	0.211	0.761	0.247	0.000	
3.8222	0.212	0.780	0.257	0.000	
3.9111	0.212	0.799	0.267	0.000	
4.0000	0.213	0.817	0.277	0.000	
4.0889	0.213	0.836	0.288	0.000	
4.1778	0.213	0.855	0.298	0.000	
4.2667	0.214	0.874	0.309	0.000	
4.3556	0.214	0.893	0.319	0.000	
4.4444	0.214	0.913	0.330	0.000	Stage4.5’ vol= 0.925 ac-ft
4.5333	0.215	0.932	0.341	0.000	ELEV 276:Vol= 40,288 CF
4.6222	0.215	0.951	0.353	0.000	
4.7111	0.216	0.970	0.364	0.000	
4.8000	0.216	0.989	0.376	0.000	
4.8889	0.216	1.008	0.387	0.000	
4.9778	0.217	1.028	0.399	0.000	
5.0667	0.217	1.047	0.411	0.000	
5.1556	0.217	1.066	0.423	0.000	
5.2444	0.218	1.086	0.435	0.000	
5.3333	0.218	1.105	0.448	0.000	
5.4222	0.219	1.125	0.460	0.000	
5.5111	0.219	1.144	0.473	0.000	
5.6000	0.219	1.164	0.486	0.000	
5.6889	0.220	1.183	0.499	0.000	
5.7778	0.220	1.203	0.512	0.000	
5.8667	0.220	1.222	0.525	0.000	
5.9556	0.221	1.242	0.538	0.000	

6.0444	0.221	1.262	0.552	0.000	
6.1333	0.222	1.281	0.565	0.000	
6.2222	0.222	1.301	0.579	0.000	
6.3111	0.222	1.321	0.593	0.000	
6.4000	0.223	1.341	0.606	0.000	
6.4889	0.223	1.361	0.620	0.000	Stage 6.5’ Vol=1.363 ac-ft
6.5778	0.223	1.381	0.635	0.000	Elev 278:Vol= 59,394 CF
6.6667	0.224	1.400	0.649	0.000	
6.7556	0.224	1.420	0.663	0.000	
6.8444	0.225	1.440	0.678	0.000	
6.9333	0.225	1.460	0.692	0.000	Stage 7.0’ vol=1.476 ac-ft
7.0222	0.225	1.481	0.756	0.000	Elev 278.5:Vol= 64,284 CF
7.1111	0.226	1.501	1.293	0.000	
7.2000	0.226	1.521	2.111	0.000	
7.2889	0.226	1.541	3.082	0.000	
7.3778	0.227	1.561	4.095	0.000	
7.4667	0.227	1.581	5.036	0.000	
7.5556	0.228	1.602	5.808	0.000	
7.6444	0.228	1.622	6.362	0.000	
7.7333	0.228	1.642	6.727	0.000	
7.8222	0.229	1.662	7.140	0.000	
7.9111	0.229	1.683	7.480	0.000	
8.0000	0.229	1.703	7.804	0.000	
8.0889	0.230	1.724	8.113	0.000	

ANALYSIS RESULTS

Predeveloped Landuse Totals for POC #1
Total Pervious Area:5.43
Total Impervious Area:0

Mitigated Landuse Totals for POC #1
Total Pervious Area:2.16
Total Impervious Area:3.27

Flow Frequency Return Periods for Predeveloped. POC #1

Return Period	Flow(cfs)
2 year	0.255544
5 year	0.371056
10 year	0.460248
25 year	0.588421
50 year	0.69581
100 year	0.813984

Flow Frequency Return Periods for Mitigated. POC #1

Return Period	Flow(cfs)
2 year	0.166889
5 year	0.239823
10 year	0.296861
25 year	0.379737

50 year	0.449897
100 year	0.527774

Annual Peaks for Predeveloped and Mitigated. POC #1

Year	Predeveloped	Mitigated
1949	0.176	0.143
1950	0.436	0.161
1951	0.180	0.123
1952	0.192	0.105
1953	0.250	0.109
1954	0.394	0.169
1955	0.404	0.230
1956	0.268	0.226
1957	0.403	0.264
1958	0.515	0.143
1959	0.253	0.168
1960	0.237	0.223
1961	0.337	0.175
1962	0.366	0.151
1963	0.560	0.122
1964	0.239	0.119
1965	0.192	0.172
1966	0.143	0.122
1967	0.296	0.135
1968	0.346	0.242
1969	0.474	0.126
1970	0.166	0.124
1971	0.243	0.225
1972	0.289	0.188
1973	0.168	0.155
1974	0.219	0.154
1975	0.202	0.117
1976	0.168	0.174
1977	0.170	0.129
1978	0.182	0.104
1979	0.548	0.187
1980	0.208	0.108
1981	0.225	0.129
1982	0.233	0.285
1983	0.236	0.133
1984	0.219	0.262
1985	0.299	0.197
1986	0.651	0.539
1987	0.302	0.349
1988	0.181	0.229
1989	0.289	0.096
1990	0.201	0.227
1991	0.214	0.189
1992	0.217	0.174
1993	0.155	0.116
1994	0.145	0.169
1995	0.212	0.247
1996	0.413	0.244
1997	0.829	0.672

Ranked Annual Peaks for Predeveloped and Mitigated. POC #1

Rank	Predeveloped	Mitigated
1	0.8291	0.6718
2	0.6506	0.5394
3	0.5601	0.3489
4	0.5483	0.2848
5	0.5151	0.2641
6	0.4744	0.2621
7	0.4359	0.2467
8	0.4127	0.2442
9	0.4037	0.2419
10	0.4026	0.2303
11	0.3938	0.2289
12	0.3664	0.2272
13	0.3458	0.2262
14	0.3371	0.2250
15	0.3023	0.2232
16	0.2987	0.1966
17	0.2962	0.1888
18	0.2894	0.1885
19	0.2893	0.1869
20	0.2680	0.1754
21	0.2533	0.1744
22	0.2499	0.1739
23	0.2433	0.1725
24	0.2389	0.1686
25	0.2365	0.1685
26	0.2359	0.1683
27	0.2331	0.1611
28	0.2251	0.1554
29	0.2192	0.1536
30	0.2186	0.1506
31	0.2169	0.1428
32	0.2144	0.1427
33	0.2115	0.1347
34	0.2081	0.1327
35	0.2022	0.1295
36	0.2010	0.1289
37	0.1920	0.1255
38	0.1916	0.1241
39	0.1825	0.1228
40	0.1812	0.1225
41	0.1803	0.1224
42	0.1764	0.1185
43	0.1695	0.1170
44	0.1680	0.1162
45	0.1678	0.1088
46	0.1658	0.1076
47	0.1554	0.1048
48	0.1447	0.1041
49	0.1433	0.0961

POC #1
The Facility PASSED

The Facility PASSED.

Flow(cfs)	Predev	Mit	Percentage	Pass/Fail
0.1278	2621	2620	99	Pass
0.1335	2307	2228	96	Pass
0.1392	2029	1930	95	Pass
0.1450	1816	1680	92	Pass
0.1507	1600	1394	87	Pass
0.1565	1382	1135	82	Pass
0.1622	1199	951	79	Pass
0.1679	1072	835	77	Pass
0.1737	940	712	75	Pass
0.1794	812	628	77	Pass
0.1851	715	547	76	Pass
0.1909	647	461	71	Pass
0.1966	577	428	74	Pass
0.2024	524	403	76	Pass
0.2081	448	373	83	Pass
0.2138	410	354	86	Pass
0.2196	369	326	88	Pass
0.2253	331	277	83	Pass
0.2311	297	232	78	Pass
0.2368	263	208	79	Pass
0.2425	234	181	77	Pass
0.2483	218	161	73	Pass
0.2540	199	150	75	Pass
0.2597	187	139	74	Pass
0.2655	166	126	75	Pass
0.2712	157	120	76	Pass
0.2770	146	118	80	Pass
0.2827	134	110	82	Pass
0.2884	126	105	83	Pass
0.2942	118	100	84	Pass
0.2999	113	99	87	Pass
0.3056	108	95	87	Pass
0.3114	105	91	86	Pass
0.3171	98	88	89	Pass
0.3229	97	86	88	Pass
0.3286	93	82	88	Pass
0.3343	92	78	84	Pass
0.3401	87	73	83	Pass
0.3458	85	71	83	Pass
0.3515	82	66	80	Pass
0.3573	79	66	83	Pass
0.3630	76	61	80	Pass
0.3688	73	59	80	Pass
0.3745	69	56	81	Pass
0.3802	67	56	83	Pass
0.3860	64	54	84	Pass
0.3917	62	53	85	Pass
0.3974	58	51	87	Pass
0.4032	56	51	91	Pass
0.4089	54	47	87	Pass
0.4147	53	47	88	Pass
0.4204	51	45	88	Pass
0.4261	50	44	88	Pass
0.4319	50	42	84	Pass
0.4376	48	41	85	Pass

0.4433	46	39	84	Pass
0.4491	46	38	82	Pass
0.4548	46	36	78	Pass
0.4606	44	36	81	Pass
0.4663	43	34	79	Pass
0.4720	42	33	78	Pass
0.4778	40	33	82	Pass
0.4835	39	31	79	Pass
0.4893	37	30	81	Pass
0.4950	37	28	75	Pass
0.5007	36	27	75	Pass
0.5065	35	27	77	Pass
0.5122	31	26	83	Pass
0.5179	29	25	86	Pass
0.5237	29	24	82	Pass
0.5294	27	23	85	Pass
0.5352	25	22	88	Pass
0.5409	24	21	87	Pass
0.5466	23	20	86	Pass
0.5524	22	20	90	Pass
0.5581	22	19	86	Pass
0.5638	17	18	105	Pass
0.5696	15	16	106	Pass
0.5753	15	14	93	Pass
0.5811	15	13	86	Pass
0.5868	14	12	85	Pass
0.5925	12	10	83	Pass
0.5983	12	9	75	Pass
0.6040	12	8	66	Pass
0.6097	10	8	80	Pass
0.6155	9	7	77	Pass
0.6212	7	6	85	Pass
0.6270	7	6	85	Pass
0.6327	7	6	85	Pass
0.6384	7	5	71	Pass
0.6442	5	4	80	Pass
0.6499	5	3	60	Pass
0.6556	4	3	75	Pass
0.6614	3	2	66	Pass
0.6671	2	1	50	Pass
0.6729	2	0	0	Pass
0.6786	2	0	0	Pass
0.6843	2	0	0	Pass
0.6901	1	0	0	Pass
0.6958	1	0	0	Pass

Water Quality BMP Flow and Volume for POC #1
On-line facility volume: 0.4724 **acre-feet = 20,577 CF**
On-line facility target flow: 0.5666 **cfs.**
Adjusted for 15 min: 0.611 **cfs.**
Off-line facility target flow: 0.3197 **cfs.**
Adjusted for 15 min: 0.3448 **cfs.**

Perlnd and Implnd Changes

No changes have been made.

This program and accompanying documentation are provided 'as-is' without warranty of any kind. The entire risk regarding the performance and results of this program is assumed by End User. Clear Creek Solutions Inc. and the governmental licensee or sublicensees disclaim all warranties, either expressed or implied, including but not limited to implied warranties of program and accompanying documentation. In no event shall Clear Creek Solutions Inc. be liable for any damages whatsoever (including without limitation to damages for loss of business profits, loss of business information, business interruption, and the like) arising out of the use of, or inability to use this program even if Clear Creek Solutions Inc. or their authorized representatives have been advised of the possibility of such damages. Software Copyright © by : Clear Creek Solutions, Inc. 2005-2016; All Rights Reserved.

Frontage Basin Detention and Water Quality:

Detention pipe will provide flow control for the frontage basin per the DOE Technical Manual, section 3.2.2. The frontage basin flows will be treated by a StormFilter ZPG media filtration structure located upstream detention tank facility. Please see the following pages for modeling and sizing information.

WWHM4
PROJECT REPORT

Project Name: FrontageBasin
Site Name:
Site Address:
City :
Report Date: 5/4/2016
Gage : Everett
Data Start : 1948/10/01
Data End : 1997/09/30
Precip Scale: 1.20
Version Date: 2015/12/15

Low Flow Threshold for POC 1 : 50 Percent of the 2 Year

High Flow Threshold for POC 1: 50 year

PREDEVELOPED LAND USE

Name : South Basin
Bypass: No

GroundWater: No

Pervious Land Use	acre
C, Forest, Steep	.31
Pervious Total	0.31

Impervious Land Use	acre
Impervious Total	0
Basin Total	0.31

Element Flows To:

Surface	Interflow	Groundwater

MITIGATED LAND USE

Name : Basin 1
Bypass: No

GroundWater: No

Pervious Land Use	acre

C, Lawn, Flat	**.17**
Pervious Total	**0.17**

Impervious Land Use	**acre**
ROADS FLAT	**0.14**
Impervious Total	**0.14**
Basin Total	**0.31**

Element Flows To:

Surface	**Interflow**	**Groundwater**
Tank 1	Tank 1	

Name : Tank 1
Tank Name: Tank 1

Dimensions
Depth: 8 ft.
Tank Type : Circular
Diameter : 8 ft.
Length : 90 ft.
Discharge Structure
Riser Height: 7 ft.
Riser Diameter: 18 in.
Notch Type: Rectangular
Notch Width: 0.010 ft.
Notch Height: 1.000 ft.
Orifice 1 Diameter: 0.42 in. **Elevation:** 0 ft.

Element Flows To:

Outlet 1	**Outlet 2**

Tank Hydraulic Table

Stage(feet)	Area(ac.)	Volume(ac-ft.)	Discharge(cfs)	Infilt(cfs)
0.0000	0.000	0.000	0.000	0.000
0.0889	0.003	0.000	0.001	0.000
0.1778	0.004	0.000	0.002	0.000
0.2667	0.005	0.001	0.002	0.000
0.3556	0.006	0.001	0.002	0.000
0.4444	0.007	0.002	0.003	0.000
0.5333	0.008	0.003	0.003	0.000
0.6222	0.008	0.003	0.003	0.000
0.7111	0.009	0.004	0.004	0.000
0.8000	0.009	0.005	0.004	0.000
0.8889	0.010	0.006	0.004	0.000
0.9778	0.010	0.007	0.004	0.000

1.0667	0.011	0.008	0.004	0.000
1.1556	0.011	0.009	0.005	0.000
1.2444	0.012	0.010	0.005	0.000
1.3333	0.012	0.011	0.005	0.000
1.4222	0.012	0.012	0.005	0.000
1.5111	0.012	0.013	0.005	0.000
1.6000	0.013	0.014	0.006	0.000
1.6889	0.013	0.016	0.006	0.000
1.7778	0.013	0.017	0.006	0.000
1.8667	0.014	0.018	0.006	0.000
1.9556	0.014	0.019	0.006	0.000
2.0444	0.014	0.020	0.006	0.000
2.1333	0.014	0.022	0.007	0.000
2.2222	0.014	0.023	0.007	0.000
2.3111	0.015	0.024	0.007	0.000
2.4000	0.015	0.026	0.007	0.000
2.4889	0.015	0.027	0.007	0.000
2.5778	0.015	0.028	0.007	0.000
2.6667	0.015	0.030	0.007	0.000
2.7556	0.015	0.031	0.007	0.000
2.8444	0.015	0.033	0.008	0.000
2.9333	0.015	0.034	0.008	0.000
3.0222	0.016	0.035	0.008	0.000
3.1111	0.016	0.037	0.008	0.000
3.2000	0.016	0.038	0.008	0.000
3.2889	0.016	0.040	0.008	0.000
3.3778	0.016	0.041	0.008	0.000
3.4667	0.016	0.043	0.008	0.000
3.5556	0.016	0.044	0.009	0.000
3.6444	0.016	0.046	0.009	0.000
3.7333	0.016	0.047	0.009	0.000
3.8222	0.016	0.049	0.009	0.000
3.9111	0.016	0.050	0.009	0.000
4.0000	0.016	0.051	0.009	0.000
4.0889	0.016	0.053	0.009	0.000
4.1778	0.016	0.054	0.009	0.000
4.2667	0.016	0.056	0.009	0.000
4.3556	0.016	0.057	0.010	0.000
4.4444	0.016	0.059	0.010	0.000
4.5333	0.016	0.060	0.010	0.000
4.6222	0.016	0.062	0.010	0.000
4.7111	0.016	0.063	0.010	0.000
4.8000	0.016	0.065	0.010	0.000
4.8889	0.016	0.066	0.010	0.000
4.9778	0.016	0.067	0.010	0.000
5.0667	0.015	0.069	0.010	0.000
5.1556	0.015	0.070	0.010	0.000
5.2444	0.015	0.072	0.011	0.000
5.3333	0.015	0.073	0.011	0.000
5.4222	0.015	0.074	0.011	0.000
5.5111	0.015	0.076	0.011	0.000
5.6000	0.015	0.077	0.011	0.000
5.6889	0.015	0.079	0.011	0.000
5.7778	0.014	0.080	0.011	0.000
5.8667	0.014	0.081	0.011	0.000
5.9556	0.014	0.082	0.011	0.000
6.0444	0.014	0.084	0.012	0.000

6.1333	0.014	0.085	0.013	0.000
6.2222	0.013	0.086	0.015	0.000
6.3111	0.013	0.087	0.017	0.000
6.4000	0.013	0.089	0.019	0.000
6.4889	0.012	0.090	0.022	0.000
6.5778	0.012	0.091	0.025	0.000
6.6667	0.012	0.092	0.028	0.000
6.7556	0.012	0.093	0.031	0.000
6.8444	0.011	0.094	0.034	0.000
6.9333	0.011	0.095	0.037	0.000
7.0222	0.010	0.096	0.092	0.000
7.1111	0.010	0.097	0.627	0.000
7.2000	0.009	0.098	1.443	0.000
7.2889	0.009	0.099	2.414	0.000
7.3778	0.008	0.100	3.425	0.000
7.4667	0.008	0.100	4.365	0.000
7.5556	0.007	0.101	5.137	0.000
7.6444	0.006	0.102	5.689	0.000
7.7333	0.005	0.102	6.053	0.000
7.8222	0.004	0.103	6.466	0.000
7.9111	0.003	0.103	6.804	0.000
8.0000	0.000	0.103	7.126	0.000
8.0889	0.000	0.000	7.435	0.000

ANALYSIS RESULTS

Predeveloped Landuse Totals for POC #1
Total Pervious Area:0.31
Total Impervious Area:0

Mitigated Landuse Totals for POC #1
Total Pervious Area:0.17
Total Impervious Area:0.14

Flow Frequency Return Periods for Predeveloped. POC #1

Return Period	**Flow(cfs)**
2 year	0.014589
5 year	0.021184
10 year	0.026276
25 year	0.033593
50 year	0.039724
100 year	0.046471

Flow Frequency Return Periods for Mitigated. POC #1

Return Period	**Flow(cfs)**
2 year	0.007512
5 year	0.009384
10 year	0.010671
25 year	0.012355
50 year	0.013655

100 year 0.014995

Annual Peaks for Predeveloped and Mitigated. POC #1

Year	Predeveloped	Mitigated
1949	0.010	0.007
1950	0.025	0.007
1951	0.010	0.007
1952	0.011	0.006
1953	0.014	0.006
1954	0.022	0.008
1955	0.023	0.008
1956	0.015	0.009
1957	0.023	0.009
1958	0.029	0.007
1959	0.014	0.008
1960	0.014	0.008
1961	0.019	0.008
1962	0.021	0.007
1963	0.032	0.007
1964	0.014	0.007
1965	0.011	0.008
1966	0.008	0.007
1967	0.017	0.007
1968	0.020	0.009
1969	0.027	0.007
1970	0.009	0.007
1971	0.014	0.008
1972	0.017	0.008
1973	0.010	0.007
1974	0.013	0.007
1975	0.012	0.007
1976	0.010	0.008
1977	0.010	0.006
1978	0.010	0.006
1979	0.031	0.008
1980	0.012	0.006
1981	0.013	0.007
1982	0.013	0.009
1983	0.013	0.007
1984	0.012	0.009
1985	0.017	0.008
1986	0.037	0.011
1987	0.017	0.010
1988	0.010	0.008
1989	0.017	0.005
1990	0.011	0.008
1991	0.012	0.008
1992	0.012	0.008
1993	0.009	0.006
1994	0.008	0.007
1995	0.012	0.009
1996	0.024	0.009
1997	0.047	0.033

Ranked Annual Peaks for Predeveloped and Mitigated. POC #1

Rank	Predeveloped	Mitigated
1	0.0473	0.0330
2	0.0371	0.0110
3	0.0320	0.0095
4	0.0313	0.0090
5	0.0294	0.0087
6	0.0271	0.0087
7	0.0249	0.0087
8	0.0236	0.0086
9	0.0230	0.0086
10	0.0230	0.0085
11	0.0225	0.0081
12	0.0209	0.0081
13	0.0197	0.0081
14	0.0192	0.0080
15	0.0173	0.0079
16	0.0171	0.0079
17	0.0169	0.0079
18	0.0165	0.0079
19	0.0165	0.0078
20	0.0153	0.0077
21	0.0145	0.0076
22	0.0143	0.0076
23	0.0139	0.0076
24	0.0136	0.0076
25	0.0135	0.0075
26	0.0135	0.0074
27	0.0133	0.0074
28	0.0129	0.0074
29	0.0125	0.0074
30	0.0125	0.0073
31	0.0124	0.0072
32	0.0122	0.0070
33	0.0121	0.0070
34	0.0119	0.0069
35	0.0115	0.0069
36	0.0115	0.0068
37	0.0110	0.0067
38	0.0109	0.0067
39	0.0104	0.0066
40	0.0103	0.0066
41	0.0103	0.0066
42	0.0101	0.0065
43	0.0097	0.0065
44	0.0096	0.0065
45	0.0096	0.0064
46	0.0095	0.0063
47	0.0089	0.0060
48	0.0083	0.0059
49	0.0082	0.0055

POC #1
The Facility PASSED

The Facility PASSED.

Flow(cfs)	Predev	Mit	Percentage	Pass/Fail
0.0073	2584	2165	83	Pass
0.0076	2281	1455	63	Pass
0.0079	2024	942	46	Pass
0.0083	1776	643	36	Pass
0.0086	1570	390	24	Pass
0.0089	1364	273	20	Pass
0.0093	1194	227	19	Pass
0.0096	1049	184	17	Pass
0.0099	932	166	17	Pass
0.0102	807	148	18	Pass
0.0106	714	129	18	Pass
0.0109	638	103	16	Pass
0.0112	570	74	12	Pass
0.0116	518	61	11	Pass
0.0119	448	52	11	Pass
0.0122	400	43	10	Pass
0.0125	365	40	10	Pass
0.0129	329	37	11	Pass
0.0132	296	37	12	Pass
0.0135	260	35	13	Pass
0.0138	233	34	14	Pass
0.0142	216	33	15	Pass
0.0145	199	30	15	Pass
0.0148	187	29	15	Pass
0.0152	166	28	16	Pass
0.0155	157	27	17	Pass
0.0158	141	25	17	Pass
0.0161	132	24	18	Pass
0.0165	126	22	17	Pass
0.0168	118	21	17	Pass
0.0171	113	20	17	Pass
0.0174	108	19	17	Pass
0.0178	104	18	17	Pass
0.0181	98	17	17	Pass
0.0184	96	16	16	Pass
0.0188	93	16	17	Pass
0.0191	92	15	16	Pass
0.0194	87	15	17	Pass
0.0197	85	14	16	Pass
0.0201	82	14	17	Pass
0.0204	79	13	16	Pass
0.0207	76	13	17	Pass
0.0211	72	13	18	Pass
0.0214	69	12	17	Pass
0.0217	67	12	17	Pass
0.0220	64	12	18	Pass
0.0224	61	12	19	Pass
0.0227	58	11	18	Pass
0.0230	56	11	19	Pass
0.0233	54	11	20	Pass
0.0237	52	11	21	Pass
0.0240	51	10	19	Pass
0.0243	50	9	18	Pass
0.0247	50	9	18	Pass
0.0250	47	8	17	Pass
0.0253	46	7	15	Pass

0.0256	46	7	15	Pass
0.0260	46	7	15	Pass
0.0263	44	6	13	Pass
0.0266	43	6	13	Pass
0.0269	42	6	14	Pass
0.0273	40	6	15	Pass
0.0276	39	6	15	Pass
0.0279	37	6	16	Pass
0.0283	37	5	13	Pass
0.0286	36	5	13	Pass
0.0289	35	5	14	Pass
0.0292	31	5	16	Pass
0.0296	29	5	17	Pass
0.0299	29	5	17	Pass
0.0302	27	3	11	Pass
0.0306	25	3	12	Pass
0.0309	24	2	8	Pass
0.0312	23	2	8	Pass
0.0315	22	2	9	Pass
0.0319	22	1	4	Pass
0.0322	17	1	5	Pass
0.0325	15	1	6	Pass
0.0328	15	1	6	Pass
0.0332	15	0	0	Pass
0.0335	14	0	0	Pass
0.0338	12	0	0	Pass
0.0342	12	0	0	Pass
0.0345	12	0	0	Pass
0.0348	10	0	0	Pass
0.0351	9	0	0	Pass
0.0355	7	0	0	Pass
0.0358	7	0	0	Pass
0.0361	7	0	0	Pass
0.0364	7	0	0	Pass
0.0368	5	0	0	Pass
0.0371	5	0	0	Pass
0.0374	4	0	0	Pass
0.0378	3	0	0	Pass
0.0381	2	0	0	Pass
0.0384	2	0	0	Pass
0.0387	2	0	0	Pass
0.0391	2	0	0	Pass
0.0394	1	0	0	Pass
0.0397	1	0	0	Pass

Water Quality BMP Flow and Volume for POC #1
On-line facility volume: 0.0225 **acre-feet**
On-line facility target flow: 0.0249 **cfs.**
Adjusted for 15 min: 0.0263 **cfs.**
Off-line facility target flow: 0.0138 **cfs.**
Adjusted for 15 min: 0.0146 **cfs.**

Perlnd and Implnd Changes

No changes have been made.

This program and accompanying documentation are provided 'as-is' without warranty of any kind. The entire risk regarding the performance and results of this program is assumed by End User. Clear Creek Solutions Inc. and the governmental licensee or sublicensees disclaim all warranties, either expressed or implied, including but not limited to implied warranties of program and accompanying documentation. In no event shall Clear Creek Solutions Inc. be liable for any damages whatsoever (including without limitation to damages for loss of business profits, loss of business information, business interruption, and the like) arising out of the use of, or inability to use this program even if Clear Creek Solutions Inc. or their authorized representatives have been advised of the possibility of such damages. Software Copyright © by : Clear Creek Solutions, Inc. 2005-2016; All Rights Reserved.

Size and Cost Estimate

Prepared by Stephanie Jacobsen on May 4, 2016

Klier Property – Stormwater Treatment System

Monroe, WA

Information provided:

- Total contributing area = 0.31ac
- Impervious area = 0.14ac
- Water quality flow, Q_{wq} = cfs
- Peak hydraulic flow rate, Q_{peak} = cfs
- Presiding agency = City of Monroe, WA

Assumptions:

- Media = ZPG cartridges
- Cartridge flow rate = 11.25gpm
- Drop required from inlet to outlet = 3.05' minimum

Size and cost estimates:

The StormFilter is a flow-based system, and is therefore sized by calculating the peak water quality flow rate associated with the design storm. The water quality flow rate was calculated by the consulting engineer using WWHM and was provided to Contech Engineered Solutions LLC for the purposes of developing this estimate.

The StormFilter for this site was sized based on a water quality flow rate of 0.025cfs. To accommodate this flow rate, Contech Engineered Solutions recommends using a StormFilter catch basin with 1, 27" cartridge (see attached detail). The estimated cost of this system is $6,950, complete and delivered to the job site. This estimate assumes that the vault is between 3.05' to 4.25' from rim elevation to outlet invert elevation. The final system cost will depend on the actual depth of the units and whether extras like doors rather than castings are specified. The contractor is responsible for setting the StormFilter and all external plumbing.

Typically the precast StormFilters have internal bypass capacities of 1.0 cfs. If the peak discharge off the site is expected to exceed this rate, we recommend placing a high-flow bypass upstream of the StormFilter system. Contech Engineered Solutions could provide our high-flow bypass, the StormGate, which provides a combination weir-orifice control structure to limit the flow to the StormFilter. The estimated cost of this structure is $4,000. The final cost would depend on the actual depth and size of the unit.

©2012 Contech Engineered Solutions LLC

Determining Number of Cartridges for Flow Based Systems

CONTECH Stormwater Solutions Inc. Engineer:	5/4/2016
Date	5/4/2016

Site Information

Project Name	Klier Property	
Project State	Washington	
Project Location	Monroe	
Drainage Area, Ad	0.31	ac
Impervious Area, Ai	0.14	ac
Pervious Area, Ap	0.17	
% Impervious	45%	
Runoff Coefficient, Rc	0.46	
Water quality flow	0.03	cfs
Peak storm flow	0.20	cfs

Filter System

Filtration brand	StormFilter	
Cartridge height	27	in
Specific Flow Rate	1.00	gpm/ft^2
Flow rate per cartridge	11.3	gpm

SUMMARY

Number of Cartridges	1

©2006 CONTECH Stormwater Solutions
contechstormwater.com

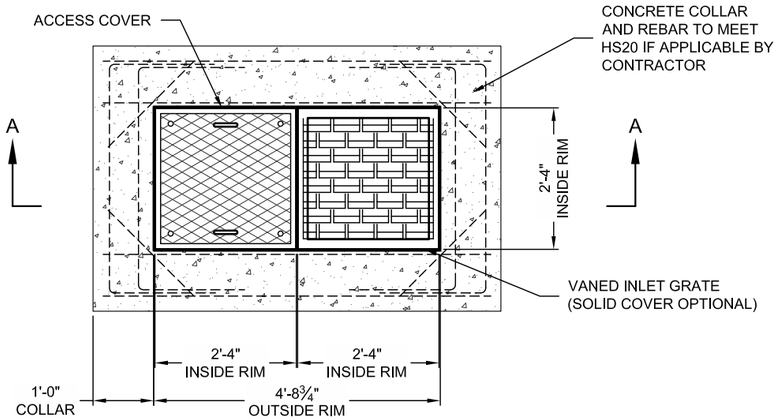

PLAN VIEW

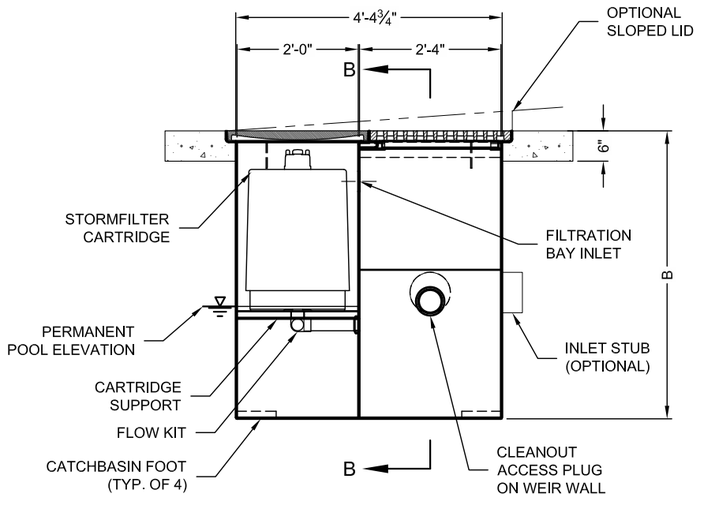

SECTION A-A

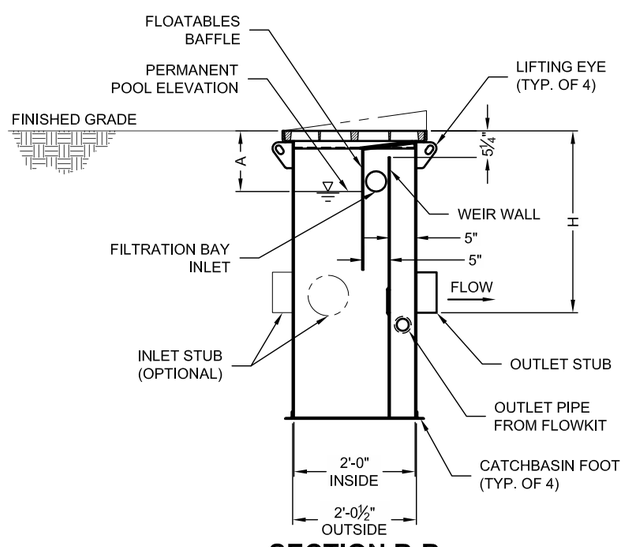

SECTION B-B

STORMFILTER CATCHBASIN DESIGN NOTES

STORMFILTER TREATMENT CAPACITY IS A FUNCTION OF THE CARTRIDGE SELECTION AND THE NUMBER OF CARTRIDGES. 1 CARTRIDGE CATCHBASIN HAS A MAXIMUM OF ONE CARTRIDGE. SYSTEM IS SHOWN WITH A 27" CARTRIDGE, AND IS ALSO AVAILABLE WITH AN 18" CARTRIDGE. STORMFILTER CATCHBASIN CONFIGURATIONS ARE AVAILABLE WITH A DRY INLET BAY FOR VECTOR CONTROL.
PEAK HYDRAULIC CAPACITY PER TABLE BELOW. IF THE SITE CONDITIONS EXCEED PEAK HYDRAULIC CAPACITY, AN UPSTREAM BYPASS STRUCTURE IS REQUIRED.

CARTRIDGE SELECTION

CARTRIDGE HEIGHT	27"		18"		18" DEEP	
RECOMMENDED HYDRAULIC DROP (H)	3.05'		2.3'		3.3'	
SPECIFIC FLOW RATE (gpm/sf)	2 gpm/ft²	1 gpm/ft²	2 gpm/ft²	1 gpm/ft²	2 gpm/ft²	1 gpm/ft²
CARTRIDGE FLOW RATE (gpm)	22.5	11.25	15	7.5	15	7.5
PEAK HYDRAULIC CAPACITY	1.0		1.0		1.8	
INLET PERMANENT POOL LEVEL (A)	1'-0"		1'-0"		2'-0"	
OVERALL STRUCTURE HEIGHT (B)	4'-9"		3'-9"		4'-9"	

GENERAL NOTES
1. CONTECH TO PROVIDE ALL MATERIALS UNLESS NOTED OTHERWISE.
2. FOR SITE SPECIFIC DRAWINGS WITH DETAILED STORMFILTER CATCHBASIN STRUCTURE DIMENSIONS AND WEIGHTS, PLEASE CONTACT YOUR CONTECH ENGINEERED SOLUTIONS LLC REPRESENTATIVE. www.contechES.com
3. STORMFILTER CATCHBASIN WATER QUALITY STRUCTURE SHALL BE IN ACCORDANCE WITH ALL DESIGN DATA AND INFORMATION CONTAINED IN THIS DRAWING.
4. INLET SHOULD NOT BE LOWER THAN OUTLET. INLET (IF APPLICABLE) AND OUTLET PIPING TO BE SPECIFIED BY ENGINEER AND PROVIDED BY CONTRACTOR.
5. STORMFILTER CATCHBASIN EQUIPPED WITH 4 INCH (APPROXIMATE) LONG STUBS FOR INLET (IF APPLICABLE) AND OUTLET PIPING. STANDARD OUTLET STUB IS 8 INCHES IN DIAMETER. MAXIMUM OUTLET STUB IS 15 INCHES IN DIAMETER. CONNECTION TO COLLECTION PIPING CAN BE MADE USING FLEXIBLE COUPLING BY CONTRACTOR.
6. STEEL STRUCTURE TO BE MANUFACTURED OF 1/4 INCH STEEL PLATE. CASTINGS SHALL MEET AASHTO M306 LOAD RATING. TO MEET HS20 LOAD RATING ON STRUCTURE, A CONCRETE COLLAR IS REQUIRED. WHEN REQUIRED, CONCRETE COLLAR WITH #4 REINFORCING BARS TO BE PROVIDED BY CONTRACTOR.
7. FILTER CARTRIDGES SHALL BE MEDIA-FILLED, PASSIVE, SIPHON ACTUATED, RADIAL FLOW, AND SELF CLEANING. RADIAL MEDIA DEPTH SHALL BE 7-INCHES. FILTER MEDIA CONTACT TIME SHALL BE AT LEAST 37 SECONDS.
8. SPECIFIC FLOW RATE IS EQUAL TO THE FILTER TREATMENT CAPACITY (gpm) DIVIDED BY THE FILTER CONTACT SURFACE AREA (sq ft).

INSTALLATION NOTES
A. ANY SUB-BASE, BACKFILL DEPTH, AND/OR ANTI-FLOTATION PROVISIONS ARE SITE-SPECIFIC DESIGN CONSIDERATIONS AND SHALL BE SPECIFIED BY ENGINEER OF RECORD.
B. CONTRACTOR TO PROVIDE EQUIPMENT WITH SUFFICIENT LIFTING AND REACH CAPACITY TO LIFT AND SET THE CATCHBASIN (LIFTING CLUTCHES PROVIDED).
C. CONTRACTOR TO TAKE APPROPRIATE MEASURES TO PROTECT CARTRIDGES FROM CONSTRUCTION-RELATED EROSION RUNOFF.

1-CARTRIDGE CATCHBASIN STORMFILTER DATA

STRUCTURE ID		XXX
WATER QUALITY FLOW RATE (cfs)		X.XX
PEAK FLOW RATE (<1 cfs)		X.XX
RETURN PERIOD OF PEAK FLOW (yrs)		XXX
CARTRIDGE FLOW RATE (gpm)		XX
MEDIA TYPE (CSF, PERLITE, ZPG, GAC, PHS)		XXXXX
RIM ELEVATION		XXX.XX'
PIPE DATA:	I.E.	DIAMETER
INLET STUB	XXX.XX'	XX"
OUTLET STUB	XXX.XX'	XX"
CONFIGURATION	OUTLET / INLET ◻ ○ / INLET	OUTLET / ○ ◻ INLET / INLET
SLOPED LID		YES\NO
SOLID COVER		YES\NO
NOTES/SPECIAL REQUIREMENTS:		

The Stormwater Management StormFilter®
THIS PRODUCT MAY BE PROTECTED BY ONE OR MORE OF THE FOLLOWING U.S. PATENTS: 5,322,629; 5,324,070; 5,707,527; 5,985,157; 6,027,639; 6,649,048; RELATED FOREIGN PATENTS, OR OTHER PATENTS PENDING.

CONTECH® ENGINEERED SOLUTIONS LLC
www.contechES.com
9025 Centre Pointe Dr., Suite 400, West Chester, OH 45069
800-526-3999 513-645-7000 513-645-7993 FAX

1 CARTRIDGE CATCHBASIN STORMFILTER STANDARD DETAIL

I:\COMMON\CAD\TREATMENT\10 STORMFILTER\40 STANDARD DRAWINGS\SFCB\SFCB-SIDWGSFCB-1-DTL.DWG 4/24/2015 3:17 PM

5.0 CONVEYANCE ANALYSIS AND DESIGN AND WETLAND HYDRATION

Conveyance backwater and capacity calculations are not required for the preliminary submittal. These computations will be provided in forthcoming engineering construction submittal.

SECTION 6: OPERATIONS AND MAINTENANCE MANUAL

The proposed storm drainage system consists of conveyance pipes, catch basins, wetpond detention and water quality facilities, a detention pipe facility and a StormFilter facility. These facilities will require periodic maintenance and inspection. Inspection and maintenance procedures will be provided with the engineering construction level submittal.

SECTION 7: SPECIAL REPORTS AND STUDIES

The following studies were conducted in preparation of this report and referenced within:

- Geotechnical Evaluation, provided by Nelson Geotechnical Associates, Inc. on April 29th 2016
- Critical Area Report and Buffer Mitigation Plan for Tersa Tellus, provided by Wetland Resources, Inc. on May 4th, 2016